NORTHWESTERN LANCASTER COUNTY AUTHORITY

PENN TOWNSHIP
LANCASTER COUNTY
PENNSYLVANIA

SPECIFICATIONS

FOR CONSTRUCTION OF

WATER SYSTEMS & SEWER SYSTEMS

Revised March 2014

Prepared by:

BECKER
ENGINEERING
115 MILLERSVILLE ROAD
LANCASTER, PA 17603
717-295-4975 P | 717-295-4972 F
WWW.BECKERENG.NET

TABLE OF CONTENTS

DESCRIPTION	SECTION
ADMINISTRATIVE PROCEDURES	AP
DEFINITIONS AND SPECIAL CONDITIONS	SC
PROVISIONS FOR GREASE/SAND INTERCEPTORS	GT
UTILITY EASEMENTS	UE
SUBMITTALS	01300
TRENCH EXCAVATION AND BACKFILL	02201
WATERMAINS & APPURTENANCES	02665
MANHOLES	02730
SANITARY SEWER PIPE	02731
FORCE MAINS	02732
LOW PRESSURE SANITARY SEWER	02733
PACKAGED INDIVIDUAL GRINDER PUMP STATIONS	11309
CONSTRUCTION DETAILS	1 - 58
APPENDIX A - SPECIFICATIONS FOR CONSTRUCTION OF RESIDENTIAL BUILDING SEWERS & WATER SERVICE LINES	
APPENDIX B - SPECIFIC CONDITIONS CONSTRUCTION DETAILS	60 – 63

ADMINISTRATIVE PROCEDURES

I. INTRODUCTION

The Northwestern Lancaster County Authority, hereinafter referred to as the “Authority”, adopts the following Administrative Procedures and Standard Specifications for Construction of Water Systems and Sewer Systems. A copy of this information may be obtained at the Township office.

II. APPLICATION PROCEDURE FOR EXTENSION OF WATER SYSTEM AND/OR SEWER SYSTEM

1. Any person or persons desiring extension of the water system and/or sewer system shall make preliminary application in writing to the Authority. This application shall be accompanied by the sufficient data and/or plans to allow the Authority to review and determine the extent of the proposed activity. The required plans shall be in accordance with the Authority's Standard Specifications. The application and supporting data shall be submitted prior to, or at the time of the first submission of a Subdivision and/or Land Development Plan to the Township. The requesting party shall bear all costs incident to the application, design, review, construction and inspection of said extension.

2. Coincident with the submission of the preliminary application, an escrow amount (to be specified by the Authority) shall be submitted for reimbursement of (1) the Authority Engineer's cost in review of the plans, modules and shop drawings and for inspection of the improvements and, (2) the Authority Solicitor's cost in review of right-of-way plats and deeds and preparation of an extension agreement, and (3) any other anticipated inspection costs, if required. The Township and Authority shall be irrevocably authorized to withdraw from time to time any monies deposited in the Escrow Fund by the applicant/developer in order to pay expenses and fees incurred by the Township and/or Authority. At such point as the Escrow Fund has been reduced to one-half of the amount posted by the applicant at the time of filing the application or less as a result of withdrawals as herein provided, then, and in that event, and at that time, the Township and/or Authority shall bill the applicant/developer an amount sufficient to restore the Escrow Fund to the original sum. In the event the Escrow Fund is insufficient at any time to pay such costs, the Township and/or Authority shall bill applicant/developer for the actual or anticipated additional costs. In the event the Escrow Fund is in excess of the Township's and/or Authority’s costs, the Township and/or Authority shall refund such excess monies, without interest, to developer upon completion of the development of the property.

3. Upon receipt of the preliminary application and required supplemental data, the Authority will submit the same to the Authority Engineer for review and comment. Upon receipt of the Authority Engineer's recommendations, the Authority will review the preliminary application and advise the requesting party of the results of the review. If the Authority permits the extension of the sewer system, the Authority

will recommend to the Penn Township Board of Supervisors submission of the Planning Module for Land Development to the local office of the Department of Environmental Protection (DEP) for review and approval.

4. If the DEP approves the Planning Module, a letter from the agency will be forwarded to the Township informing of such approval and notifying whether or not an application for the DEP Water Quality Management Permit will be required.

5. With regards to sewer extensions, the applicant, upon the Township's receipt of the DEP's approval of the Planning Module, will apply for the Water Quality Management Permit (if necessary). After issuance of the permit (in the name of the Northwestern Lancaster County Authority) by the DEP, the Authority will forward to the requesting party an agreement of the extension of the system.

6. The Authority may, at its discretion, require the applicant to prepare and deposit with the Authority an improvement construction assurance, which shall be sufficient to cover the construction costs of the extension of the water and/or sanitary sewer system that shall be in a form provided for within and computed in accordance with the applicable section(s) of the Pennsylvania Municipality Authorities Act.

7. The requesting party may then undertake the construction of the extension in accordance with the Authority's Standard Specifications. The Authority Engineer or Resident Representative of the Authority will conduct periodic inspections during the construction of the improvements as necessary.

8. The applicant posting security for improvement construction guarantee may request release of funds as improvements are completed. In such a case, the Authority may have the Authority Engineer report on the status of completion. The Authority shall release ninety percent (90%) of the estimated cost of partial improvements, retaining the remainder until final inspection and acceptance by the Authority.

9. Upon completion of construction, and prior to dedication of the facilities to the Authority, the requesting party shall submit one set of record drawings to the Authority Engineer for review. After the Authority Engineer reviews and approves the submitted Record Drawings, three print sets and two digital copies (one CAD and one PDF) of the Record Drawings shall be submitted to the Authority. The Record Drawings shall identify actual as-built locations, depths, and lengths of all facilities, based upon field surveyed information. The Authority will not accept dedication of the facilities until the appropriate copies of the approved Record Drawings are submitted.

11. If the Authority accepts dedication of all or some of the required improvements following completion, it may require the posting of financial security to secure the structural integrity of the dedicated improvements as well as the functioning of the

improvements in accordance with the design and specifications as depicted on the final plat and the Authority's rules and regulations. This financial security/maintenance guarantee shall expire not later than 18 months from the date of acceptance of dedication and shall be of the same type of that which was posted to secure the installation of the improvements. This financial security/maintenance guarantee shall not exceed fifteen percent (15%) of the installation costs and shall be in one of the forms permitted in Paragraph 6 above.

12. Immediately upon final approval and acceptance of ownership, all pipes, fittings, connections, and appurtenances located within rights-of-way or streets, shall become the property of the Authority. All rights-of-way across private property shall be a minimum of 30 feet width and shall be transferred to the Authority reciting all details and right to enter thereon for any purpose appropriate to the inspection, repair or maintenance of the Authority's water and/or sewer system.

13. All subsequent resolutions affecting water and/or sewer facilities owned by the Authority shall be binding upon the requesting party, his successor, assignees or agents.

14. Upon completion of the construction and acceptance by the Authority, the requesting party may apply for connection permits and shall be subject to all current rates and charges attendant to the facility.

G:\BEng-Data\Projects\13-103-01\Specification Revisions\Administrative Procedures.docx

DEFINITIONS AND SPECIAL CONDITIONS

DEFINITIONS AND SPECIAL CONDITIONS

GENERAL:

It is the intent of these Specifications to govern the Developer/Contractor in furnishing all labor and materials, and performing all work necessary for construction of extensions to the Northwestern Lancaster County Authority's water system and/or sewer system.

DEFINITIONS:

"Authority" shall mean the Northwestern Lancaster County Authority, its agents (including Penn Township), or any person or persons authorized by the Northwestern Lancaster County Authority to act on behalf of the Northwestern Lancaster County Authority.

"Authority Engineer" shall mean the firm or corporation appointed by and representing the Authority.

"Developer" shall mean the party or parties constructing the water system and/or sewer system extension.

"Contractor" shall mean the party or parties constructing the water system and/or sewer system extension.

BASIS OF DESIGN:

The design of all water system extensions, or any other utility which shall cross the water system and/or any upgrades or improvements to the existing Authority water system shall be in accordance with these Specifications and the Pennsylvania Department of Environmental Protection Public Water Supply Manual.

The design of all sewer system extensions, or any other utility which shall cross the sewer system and/or any upgrades or improvements to the existing Authority sewer system shall be in accordance with these Specifications and the Pennsylvania Department of Environmental Protection Domestic Wastewater Facilities Manual.

All sewer and water system extensions shall extend to the limits of the subject property being developed.

The Developer/Contractor shall also comply with all applicable local, state, and federal requirements. All plans submitted to the Authority shall be sealed by a Registered Professional Engineer licensed to practice in the Commonwealth of Pennsylvania, and shall be at a scale of 1” = 50’ horizontal and 1” = 10’ vertical.

SPECIAL CONDITIONS:

The Authority reserves the right to make any corrections, additions, or deductions to these Specifications at any time without prior notification.

The Authority reserves the right to request additional work and/or materials, where, in its opinion, conditions warrant such work and materials.

Any design of facilities such as pumping stations, metering chambers, etc. which are not covered in these Specifications, shall be reviewed by the Authority on a case by case basis.

The Authority requires that a water metering chamber be installed for all water service lines greater than 100 feet measured from the public right-of-way to the face of building along the water service line. This applies to both residential and commercial installations. The water metering chamber shall be installed at the right-of-way line or alternate location approved by the Authority.

INSURANCE:

CONTRACTOR'S LIABILITY INSURANCE

The limits of liability insurance shall provide coverage for not less than the following amounts or greater where required by laws and regulations:

Worker's Compensation

(1)	State:	Statutory
(2)	Applicable Federal	Statutory
(3)	Employer's Liability	$500,000/$500,000/$500,000

CONTRACTOR'S Liability Insurance which shall also include completed operations and product liability coverages and eliminate the exclusion with respect to property under the care, custody, and control of CONTRACTOR;

(1) Bodily Injury and Personal Injury;

$1,000,000	Each Occurrence
$2,000,000	Annual Aggregate

(2) Property Damage:

$1,000,000	Each Occurrence
$1,000,000	Annual Aggregate

(3) Combined Single Limits of $2,000,000.

(4) Including Premises - Operations, Explosion and Collapse Hazard, Underground Hazard, Products/Completed Operations Hazard, Contractual Insurance, Broad Form Property Damage, Independent Contractors and Personal Injury, including employees.

Automobile Liability including Owned, Hired, and Non-Owned Vehicles:

(1) Bodily Injury and Personal Injury:

$1,000,000	Each Person
$1,000,000	Each Occurrence
$1,000,000	Each Occurrence

(2) Property Damage:

$1,000,000	Each Occurrence

(3) CONTRACTOR may provide coverage with a Combined (Bodily Injury and Property Damage) Single Limit:

CONTRACTOR's Liability Insurance Policies shall name the Authority, Engineer, and Penn Township as additional insured parties.

CONTRACTOR shall provide Excess Umbrella Liability Coverage for limits of $2,000,000. Each Occurrence $2,000,000 Annual Aggregate.

CONTRACTUAL ENDORSEMENT

The contractual liability required shall provide coverage for not less than the following amounts:

(1) Bodily Injury; Each Occurrence

(2) Property Damage:

$1,000,000	Each Occurrence
$1,000,000	Annual Aggregate

(3) CONTRACTOR shall provide Excess Umbrella Liability Coverage.

PROPERTY INSURANCE

CONTRACTOR shall purchase and maintain until final payment property insurance upon the Work at the site to the full insurable value thereof (subject to such deductible amounts as may be provided in these Special Conditions or required by laws and regulations). This insurance shall include the interests of the Authority, Penn Township, Contractor, Subcontractors, Engineer, and Engineer's Consultants in the Work (all of whom shall be listed as insured or additional insured parties), This insurance shall insure against the perils of fire and extended coverage, shall include "all-risk" insurance for physical loss and damage including theft, vandalism and malicious mischief, collapse and water damage, and such other perils as may be provided in these Special Conditions, and shall include damages, losses and expenses arising out of or resulting from any insured loss or incurred in the repair or replacement of any insured property (including but not limited to fees and charges of engineers, architects, attorneys and other professionals). If not covered under the "all-risk" insurance or otherwise provided in these Special Conditions, Contractor shall purchase and maintain similar property insurance on portions of the Work stored on and off the site or in transit.

DEDUCTIBLES

The maximum deductible amount for all property insurance to be provided by Contractor as required for this contract shall be $10,000 or such limit as may be acceptable to the Authority. Approval of a deductible limit higher than $10,000 shall be requested in writing and shall be accompanied by a copy of the insurance policy.

SPECIAL INSURANCE

Contractor shall, at its discretion, purchase any special property insurance as necessary and such additional coverage may be a part of the required property insurance policy.

ACCEPTANCE OF INSURANCE

If the Authority has any objection to the coverage afforded by or other provisions of the insurance required to be purchased and maintained by Contractor, the Authority shall notify Contractor in writing thereof within ten (10) days of the date of delivery of such certificates. Contractor shall provide to the Authority such additional information in respect to insurance provided as the Authority may reasonably request. Failure by the Authority to give any such notice of objection within the time provided shall constitute acceptance of such insurance purchased by the Contractor.

At the request of the Authority, Contractor shall provide a copy of the insurance policy under which the coverage for the contract is provided.

The Authority shall review insurance coverage or will assign, at its discretion, a qualified party to review all insurance coverages to be provided. Upon completion of review, Contractor and Contractor's property insurer or insurers may be required to sign an Insured Claim Waiver, or Contractor, if required, shall secure similar signatures on such forms from all subcontractors and their property insurers.

The Authority Engineer shall have no responsibilities regarding the advising, requiring, or obtaining of any form of insurance.

INSURANCE COMPANY RATING

All Property and Liability Insurance to be purchased by Contractor shall be placed with insurance companies which carry a rating of A- or better from A.M. Best and Company Insurance Rating Service and are admitted to do business in the Commonwealth of Pennsylvania.

G:\BEng-Data\Projects\13-103-01\Specification Revisions\Definitions and Special Conditions.doc

PROVISIONS FOR GREASE/SAND INTERCEPTORS

PROVISIONS FOR GREASE/SAND INTERCEPTORS

A sand and/or grease interceptor shall be installed in a building sewer whenever, in the opinion of the Authority, a hazard may exist from the careless disposal of waste material containing oils, fats, grease, sand, grit, heavy settleable solids and other flammable and deleterious materials.

A grease interceptor shall be installed in the building sewer of the following establishments: automobile service and repair facilities, garages where vehicles are washed or gasoline stored, dry cleaners using flammable solvents, aniline plants, tanneries, paint and varnish manufacturing plants, printing ink plants, shoe-polish plants, explosive plants, soap plants, cleaning fluid manufacturing plants, testing laboratories, or any place of manufacture where volatile flammable liquid is used and which by accident or otherwise may be admitted into the drainage system.

A grease interceptor shall be installed in the waste line leading from sinks, drains or other fixtures in the following establishments: restaurants, hotel kitchens or bars, factory cafeterias or restaurants, clubs or other establishments with food preparation or kitchen facilities where oils, grease and fats may be introduced into drainage systems in quantities that may cause buildup in the lines, line stoppage, or otherwise hinder or have an adverse affect on efficient sewage disposal.

The Authority, in addition to the other powers set forth in this Specification, shall have the authority to exempt from the requirements of this ordinance, existing establishments which now contain a functioning grease and/or sand interceptor which, after inspection, the Authority determines are being effectively maintained and operated so as to prevent fats, grease, oils, sands, grit or heavy settleable solids from being deposited into the sewer system. Said exemption shall apply for only so long as the Authority determines that said existing facilities are functioning properly and are being properly maintained and cleaned. The Authority shall have the authority to require any owner to present a written certificate or other evidence acceptable to the Authority of regular periodic cleaning of the system if he, in his discretion, deems that a problem may exist.

Sand interceptors shall be installed in addition to grease interceptors in any of the establishments referenced in the immediately preceding Section that also discharge into the sewer system, liquid wastes containing sand, grit or heavy settleable solids.

A grease interceptor shall consist of one of the following:

(1) a three stage grease interceptor consisting of three separate tanks or one or more tanks divided into three segments by grease trapping baffles.
(2) a three stage manufactured/engineered grease interceptor consisting of a double baffled three (3) compartment unit installed in containment vaults with flow valves and vent lines as recommended by the manufacturer.
(3) a multi-stage grease interceptor of a configuration (baffles or piping) and orientation to comply with the requirements of this specification, sized to match the needs of the discharge being permitted.

A sand interceptor shall consist of one of the following:

(1) a single or multi-stage interceptor baffled or fitted with flow directing vents and having suitable solid storage for adequate containment between cleaning.
(2) a manufactured/engineered sand interceptor installed as per the manufacturer's recommendations.

The size and capacity of three stage grease interceptors shall be in accordance with the following criteria and the formula requiring the largest size shall be used:

(1) Six gallons of capacity per stage, for every restaurant seat.
(2) Three gallons per food customer served per peak day of operation, or anticipated peak day of operation in the case of a new business.
(3) Such size as is sufficient to allow a minimum of one hour of detention of flow at the maximum flow rate generated at any time.

Manufactured/engineered grease interceptors shall be sized in accordance with the previous sizing requirements, or in accordance with the manufacturer's recommendations, whichever produces the larger tank.

All grease and sand interceptors shall be constructed of impervious materials capable of withstanding abrupt and extreme changes in temperature. The interceptors shall be of substantial construction, water-tight, and equipped with easily removable covers. The interceptor's outlet shall be oversized or vented to prevent siphonage of tank contents.

All drawings, sketches, catalog information showing location, dimensional sizes, distances, and construction materials and any other pertinent information, along with sizing calculations of all proposed interceptors, must be submitted to the Authority for its review and approval before any interceptor may be installed.

All owners who are required under this Specification to install sand and/or grease interceptors shall be totally responsible for the maintenance, upkeep, repair, replacement and operation of said interceptor(s) and shall keep the same in good operation and repair and shall be responsible or liable for any loss or damage occurring from any failure to operate, maintain and replace when needed, said interceptor(s).

A vent and trap shall be installed in the building sewer between the building and the interceptor. A cleanout/test tee shall be installed in the lateral between the building sewer and sewer system main at the Right-of-way line.

UTILITY EASEMENTS

UTILITY EASEMENTS

A. GENERAL

1. Easements shall be required for all sewer and/or water system facilities intended for dedication to the Authority that are constructed outside the limits of a public street right-of-way. This includes, without limitation, sewer and/or water facilities installed within private streets and yard areas. In addition, easements may be required for sewer and/or water facilities constructed within a public street right-of-way if the existing right-of-way does not provide sufficient room for access or maintenance of the sewer and/or water facility.

2. Easements shall be a minimum of 30 feet wide and shall be, in general, centered over the sewer and/or water facilities unless otherwise approved by the Authority. Additional easement width may be required by the Authority on a case by case basis. Easements shall be for the exclusive use of sanitary sewer and/or water facilities owned or proposed to be dedicated to the Northwestern Lancaster County Authority. All other utilities shall remain outside the limits of the Authority's easement unless otherwise specifically approved by the Authority.

3. The Authority and its agents, contractors, or employees shall have free ingress, egress and regress on, over, and through the easement at all times and seasons, with reasonable prior notice except in the case of an emergency, in order to inspect, monitor, maintain, reconstruct, enlarge, repair, remove, relocate, or related functions any sewer and/or water main or mains, manholes, connection fittings or other appurtenances as the Authority deems necessary in its sole discretion.

4. No building, fence, lighting fixture, pond, swimming pool, driveway, parking lot or other permanent structure shall be erected or located within the sewer easement. No vehicles, campers, trailers, boats or other large equipment or facilities shall be stored within the easement on a long-term basis. No trees, shrubbery or bushes shall be planted within the boundaries of the easement. In the event that the Authority is not able to access the easement due to any of the foregoing, the Authority shall have the right, but not the obligation, to remove such obstruction at the owner's expense.

5. Property owners shall not be due compensation from the Authority for damage to permanent structures, vehicles, or other large equipment, or loss of trees, shrubbery or bushes resulting from work performed by the Authority and its agents, contractors or employees that occurs to such items that are placed within the easement following execution of an easement agreement.

6. Property owners shall not alter the grade or construct landscaping features within the easement that would impair access by the Authority.

B. REQUIREMENTS FOR DEVELOPERS/EXTENDORS

1. Individual plot plans and legal descriptions shall be provided for all easements.

   a. When an easement crossing multiple parcels is proposed by a developer, a single plot plan (at a legible scale) and legal description shall be acceptable only if the developer owns all parcels impacted by the easement at the time when the easement is offered for dedication. Otherwise, individual plot plans and legal description shall be required for all parcels containing a portion of the easement.

   b. The developer, at its sole cost and expense, shall be responsible for securing all easements from private property owners when facilities are constructed across private property to serve the developer's property. Those easements shall be assigned to the Authority following review and approval of Record Drawings and prior to dedication of the newly constructed sewer and/or water facilities.

   c. The developer, at its sole cost and expense, shall provide evidence that proposed sewer and/or water easements are incorporated into the deeds for individual properties within the development.

2. Dedication of easements shall occur following review and approval of Record Drawings and prior to dedication of the newly constructed sewer and/or water facilities.

G:\BEng-Data\Projects\13-103-01\Specification Revisions\Utility Easements.doc

CONSTRUCTION SPECIFICATIONS

SECTION 01300

SUBMITTALS

SECTION 01300 - SUBMITTALS

PART 1 - GENERAL

1.1 SECTION INCLUDES:

Submittal procedures.

Construction progress schedules.

Proposed products list.

Shop drawings.

Product Data.

Samples.

Manufacturers' instructions.

Manufacturers' certificates.

1.2 SUBMITTAL PROCEDURES:

A. All submittals shall be delivered to the Authority at the Penn Township Office.

B. Each transmittal shall be numbered in sequence. Identify project, Contractor, subcontractor, major supplier; identify any and all deviations from Authority Specifications. Provide space for Contractor and Authority Engineer review stamps.

C. All drawings showing water main and/or sanitary sewer shall be oriented so that the plan view is located above the corresponding profile view on the drawing sheet.

D. Apply Contractor's stamp, signed, and dated certifying review, verification of products required, field dimensions adjacent to construction work, and coordination of information is in accordance with the requirements of the work and Authority Specifications.

E. Coordinate submittal of related items.

F. After Authority Engineer review of submittal, revise and resubmit as required, identifying changes made since previous submittal.

G. Distribute copies of reviewed submittals to concerned persons. Instruct recipients to promptly report any inability to comply with provisions.

H. Provide Manufacturer's Safety Data Sheets (MSDS) for all products and materials.

I. Faxes shall not be accepted as shop drawing submittals.

1.3 CONSTRUCTION PROGRESS SCHEDULES:

A. Submit initial progress schedules and schedule of values in duplicate along with the initial shop drawing submittal. After review by Authority Engineer, revise and resubmit as required. Submit revised schedules on a monthly basis, reflecting changes since previous submittal. Show projected percentage of completion for each item of work.

B. Show submittal dates required for shop drawings, product data and samples, and product delivery dates.

1.4 SCHEDULE OF WORK:

A. Submit typed schedule on 8-1/2" x 11" paper; Contractor's standard form or media-driven printout will be considered on request.

B. Format: The Table of Contents of this document. Identify each line item with number and title of the major specification sections.

1.5 SHOP DRAWINGS:

A. When required, five copies of shop drawings shall be submitted by the Contractor. After review of these drawings by the Authority Engineer, the shop drawings will be stamped: 1) "Reviewed"; 2) "Furnish as Corrected"; 3) "Revise and Resubmit"; 4) "Rejected"; 5) "Not Required for Review". If the shop drawings are stamped "Revise and Resubmit", the Contractor shall make the required correction and resubmit five copies of the corrected shop drawings to the Authority, and such other copies as may be needed for proper prosecution of the work. If the shop drawings are "Rejected", the Contractor shall prepare a new shop drawing submission. The Authority Engineer's review of shop drawings shall not relieve the Contractor from responsibility for errors or discrepancies in such drawings. All shop drawings shall be identified with the name of the Contractor, and numbered in consecutive order. Two copies of all shop drawings shall be retained by the Authority Engineer. One additional copy shall be retained by the Authority.

1.6 PRODUCT DATA:

A. Mark each copy to identify applicable products, models, options, and other data; supplement manufacturers' standard data to provide information unique to this project.

1.7 SAMPLES:

A. Submit full range of manufacturers' standard colors, textures, and patterns for Authority's selection. Allow four weeks for selection of finishes from time of submission.

B. Submit samples to illustrate functional characteristics of the product, with integral parts and attachment devices. Coordinate submittal of different categories for interfacing work.

C. Include identification on each sample with full project information.

D. Submit the number or samples specified in respective specification section; one will be retained by the Authority. Review samples which may be used in the work are indicated in the specification section.

1.8 FIELD SAMPLES:

A. Provide field samples of finishes at project as required by individual specifications section. Install sample complete and finished. Acceptable samples in place may be retained in completed work.

1.9 MANUFACTURERS' INSTRUCTIONS:

A. When required in individual specification sections, submit manufacturers' printed instructions for delivery, storage, assembly, installation start up, adjusting, and finishing in quantities specified for product data.

B. Identify conflicts between manufacturers' instructions and Authority Specifications.

PART 2 - MATERIALS

Not used.

PART 3 - CONSTRUCTION

Not used.

END OF SECTION

G:\BEng-Data\Projects\13-103-01\Specification Revisions\01300.doc

SECTION 02201

TRENCH EXCAVATION AND BACKFILL

SECTION 02201 - TRENCH EXCAVATION AND BACKFILL

PART 1 - GENERAL

1.1 Related Sections:

Section 02665 - Watermains & Appurtenances
Section 02730 - Manholes
Section 02731 - Sanitary Sewer Pipe
Section 02732 - Force Mains
Section 02733 - Low Pressure Sanitary Sewer

1.2 DESCRIPTION OF WORK:

A. The work within this section includes, but is not limited to, the furnishing of all equipment, labor and materials and performing all operations necessary to excavate, protect and backfill all trenches in accordance with the Authority Specifications.

B. The Contractor shall perform all excavation of every description and of whatever substance encountered to the depths required, as specified herein. In performing the work as specified in this section, the Contractor shall conform to the current regulations of the Pennsylvania Department of Labor and Industry and applicable Federal Regulations for Excavations and Construction. All excavated materials not required for backfill shall be removed and wasted or otherwise disposed of as required or specified.

C. The Contractor shall allow a minimum of 90 days settlement for all trenches prior to final restoration. Final restoration shall be in accordance with the appropriate specification sections and details.

1.3 QUALITY ASSURANCE:

A. Referenced standards shall be the following:

1. Pennsylvania Department of Transportation (PennDOT) Publication 408 Specifications and its revisions

2. Pennsylvania Department of Transportation (PennDOT) Publication 203

3. American Society for Testing and Materials (ASTM)

PART 2 - MATERIALS

2.1 CLASSIFICATION OF MATERIALS:

A. Class 1 - This material shall consist of 2A coarse aggregate or 2RC stone free of slag, except in wet or unstable areas where the bedding may be No. 8 or No. 57 coarse aggregate. All materials shall conform to PennDOT Publication 408, Section 703.3.

B. Class 1S- This material shall consist of No. 8 coarse aggregate free of slag, except in wet or unstable areas where the bedding may be No. 8 or No. 57 coarse aggregate. All materials shall conform to PennDOT Publication 408, Section 703.3.

C. Class 2 - This material shall consist of excavated material free from cinders, ashes, refuse, vegetable or organic material, boulders, rocks no larger than four (4) inches in dimension, stone or other material which in the opinion of the Engineer is unsuitable.

PART 3- CONSTRUCTION

3.1 REMOVAL AND PROTECTION OF PAVEMENT:

A. The Contractor shall clear the surface and remove all surface materials, of whatever nature, over the line of the trench; and he shall properly separate and classify the material removed; and store, guard, and preserve said material as may be required for use in backfilling, resurfacing, repaving or for other purposes. All rock, earth, sand, curbing, gutter and flagstones, and all sectional paving units which may be removed, together with all materials taken from the trenches, shall be stored in such parts of the street or roadway, or such other suitable place, and in such manner as accepted by the Authority. The Contractor shall be responsible for any loss of, or any damage to paving materials through his own or his employee's careless removal or neglectful or waste storage, disposal or use of same.

B. Pavement shall be cut to neat lines equidistant from the centerline of the trench and the edges of the pavement shall be protected and maintained by the Contractor until the repaving is completed. If the pavement edges are not maintained to the satisfaction of the Engineer, the pavement shall be re-cut when the paving is done. All pavement shall be cut by a mechanical saw.

C. The Contractor shall also protect the street surfaces outside of the trench limits and shall repair all damage done thereto as a result of his operations.

3.2 REMOVAL AND STORAGE OF MATERIAL:

A. In the business districts or in streets that are important thoroughfares, or in narrow streets or at any other locations where the working space is limited, the material excavated from the first 100 feet of any opening, or from such additional length as may be necessary, when required by the Authority, shall be removed from the area as soon as excavated. The material subsequently excavated shall be used to refill the trench, except within State or Township highways where the material used to refill the trench shall consist of Class 1 backfill material. In no case will the Contractor be allowed to cast excavated material beyond the curb or right-of-way lines, or on sidewalks or lawns.

B. In case more material is excavated from the trench than can be backfilled over the completed pipe or can be stored on the street or within the limits of the right-of-way, leaving space for the traffic and drainage as herein provided, the excess material shall be removed to some convenient place provided by the Contractor. The Contractor shall bring back as much of the material so removed, as may be required to properly backfill the trench, or if the proper kind; or, if so required by the Authority, the Contractor shall furnish such other suitable material as may be necessary.

C. When it is necessary to haul soft or wet material over public streets, the Contractor shall provide suitable vehicles and shall conform to all laws and ordinances relevant to such hauling.

D. All topsoil shall be removed from the limits of trenches before the commencement of trench excavation. After the trenches are backfilled, the topsoil shall be replaced.

3.3 ORDER OF WORK:

A. The Contractor shall submit a progress schedule and shall carry on his work in strict accordance therewith. Deviations from the progress schedule may be made only with the approval of the Authority.

B. Service connections shall be constructed either at the same time as the main or immediately after its completion.

C. All street paving shall be replaced by the Contractor, after which the street surfaces shall be cleaned as specified herein.

D. The failure of the Contractor to comply with these requirements concerning installation of service connections and manholes, repaving and cleaning of streets shall be sufficient cause for the Authority to stop all other work on the project until these requirements have been met.

3.4 SEWER LINES AND GRADES:

A. Sewer lines and grades shall be laid out and maintained during construction in the following manner.

B. Before beginning the excavation for any run of main sewer, the Contractor's forces shall set control points for line and grade. In unpaved or unsurfaced areas, these points shall be placed on the top of stakes securely driven into the ground. In paved areas, they may be spikes driven into the paving or crosses cut into the paving, and, in either case, enclosed in a painted circle. Stakes or points shall be sufficiently offset from the centerline so as to be undisturbed during the excavation and pipe laying operations. The offset shall be on the side of the centerline opposite to that on which excavation will be thrown. The first stake or point shall be set 25 feet distant from the manhole having the lower invert; succeeding stakes shall be set 25 feet apart. Elevations of the top of stakes, or if points are used, on the surface of the paving on the centerline of the sewer opposite the points, shall be taken by the Contractor, using a surveyor's level. The Contractor shall record these elevations and compute the depths of cut to the invert of the sewer and mark both the stationing and the computed depths of cut on each stake with keep or on the road surface with paint. The Contractor shall use these depths of cut as guides for the rough excavation, making due allowance for excavating to the lower depth to accommodate the required pipe bedding, and for concrete cradles or concrete encasements. Excavation shall begin at the manhole having the lower invert and proceed upgrade.

3.5 WIDTH AND DEPTH OF TRENCHES:

A. From the subgrade elevation to an elevation at least 12 inches above the top of the outside barrel of the pipe, the banks of trenches in all cases shall be excavated to vertical lines and the trenches shall be not less than 12 inches nor more than 16 inches wider than the outside diameter, at the barrel of the pipe to be laid therein. The trenches shall be excavated true to line so that a clear space not less than 6 inches nor more than 8 inches in width is provided on each side of the barrel of the pipe. If sheeting is required, the foregoing dimensions shall be applicable to the inside faces of the sheeting.

B. From a point 12 inches above the top of the outside barrel of the pipe to the surface, the banks of trenches in all streets, roads or highways, paved or unpaved, shall be kept as nearly vertical as possible, and in no case shall the width of the trench at the top exceed the outside diameter of the pipe plus 40 inches. If the specified maximum width of the trench cannot otherwise by maintained, the Contractor shall install temporary sheeting. Where mains are to be constructed in rights-of-way or easements in open country, the specified maximum width of the trench at the top may be exceeded only if construction is kept entirely within the limits of the easements or rights-of-way and can be carried on without damage to adjoining property. The angle of slope shall be the angle at which the trench bank will stand without

sliding and in no case shall the angle of slope be steeper than one-half horizontal to one vertical.

C. In locations other than on easements or rights-of-way, the Authority may, as warranted by working conditions and where permitted by the Pennsylvania Department of Labor and Industry requirements, waive the requirements that the maximum width at the top of the trench shall not exceed the outside diameter of the pipe plus 40 inches.

D. Except at locations where excavation of unsuitable material is required, care shall be taken not to excavate below the depths specified. When the material encountered at subgrade is unstable, or where, in the opinion of the Engineer, the ground does not afford a sufficiently firm foundation, the Contractor shall excavate the trench to such increased depth as may be required by the Authority and then shall refill the trench to subgrade with crushed stone conforming to PennDOT's grading and quality requirements for No. 1B coarse aggregate, thoroughly compacted to the satisfaction of the Authority, or if required by the Authority, the Contractor shall construct a timber foundation. If earth trenches are excavated beyond the specified depths without written requirements of the Authority, they shall be backfilled to the proper grade with thoroughly tamped No. 1B crushed stone.

3.6 LENGTH OF TRENCH:

A. No trench shall be opened more than 100 feet in advance of the pipe lines laid. The Contractor shall limit all trench openings to a distance commensurate with all rules of safety.

B. If the work is stopped either totally or partially, the Contractor shall provide adequate plates, flashers, etc. to protect the motorist and pedestrian during non-working hours. All open trenches shall be covered during non-working hours.

3.7 PUMPING AND DRAINING:

A. The Contractor shall remove, by pumping or draining, any water which may accumulate in the trenches and other excavations and shall build all dams and do all other work necessary to keep the trenches or other excavation as free from water as possible. Where it is impractical to completely drain the trench, special pipe or jointing materials may be authorized at no additional expense to the Owner. While the pipelines are being laid, the Contractor shall have sufficient pumping machinery ready for immediate use. All surface waters shall be prevented from entering the open ditches or excavations by proper grading of the surface in the vicinity of the excavation. Erosion and sediment control shall be exercised in accordance with the approved plan. Under no circumstances shall any pumped water be discharged to any sanitary sewer.

3.8 MAINTENANCE OF GUTTERS:

A. The Contractor shall keep the gutters open at all times so the flow, storm or other waters shall not be obstructed. If the material excavated from the trenches must temporarily extend over the gutters, it shall be the duty of the Contractor to plank or bridge over the gutters, without extra compensation, so the flow of water is not impeded. Erosion and sedimentation control shall be exercised in accordance with the approved plan.

3.9 MAINTENANCE OF TRAFFIC:

A. Work shall be conducted so as to cause a minimum of inconvenience to pedestrian and vehicular traffic and to private and public properties along the line of work. It shall be the duty of the Contractor, at all times, to maintain crossing, walks, sidewalks, and other roadways open to the traffic and in a satisfactory condition, and to keep all fire hydrants, water valves, fire alarm boxes, and letter boxes accessible for use. Whenever it is necessary to maintain pedestrian traffic over open trenches, a timber bridge at least three feet in width and equipped with side railings shall be provided. When the excavated material will encroach upon sidewalks or private property, planking shall be placed in order to keep the sidewalk or private property clear of excavated material.

B. In important thoroughfares, highways or narrow streets, the material excavated from the trench shall be removed from the site of the work at the Contractor's expense and to bring back as much of the accepted material as necessary to properly refill the trench; or he shall, at his own cost and expense, furnish such other suitable materials as may be necessary to properly refill the trench.

C. When it is necessary to haul soft or wet materials over public streets, the Contractor shall provide suitable vehicles and shall conform to all laws and ordinances relevant to such hauling.

D. Maintenance and protection of traffic on Township streets and State highways shall be in strict accordance with PennDOT Publication 203. The Contractor shall adjust the sign locations daily in order to protect that section of highway to be disturbed during that same day.

3.10 ROCK EXCAVATION:

A. Unless otherwise accepted by the Authority, rock shall be fully taken out at least 25 feet in advance of pipe laying to subgrade as defined herein, and to a width not to exceed the specified width of the trench, for the size of pipe to be laid therein.

B. If rock below the specified grade is shattered due to excessive drilling or blasting, and if, in the opinion of the Authority, it is unfit for foundation, such shattered rock shall be removed and the area backfilled to the proper grade with concrete or other material acceptable to the Authority.

C. Where manholes are excavated in rock, they shall be excavated one foot outside the exterior lines of the walls of the manholes and to a depth of six inches below the bottom.

D. All excavated material which is unfit for refilling must be immediately removed from the site of the work.

E. Wherever rock is encountered in the excavations for manholes in which blank connections are to be left for future extensions of the sewers, the rock shall be excavated for a distance of not less than 10 feet from the center of the manhole, in the direction of the proposed extension of the sewer, and the excavation shall conform to the lines of the prism required by the dimensions of such extension.

3.11 BLASTING:

A. All blasts shall be properly matted and securely covered. The Contractor shall be solely responsible for injury to persons or property located within or beyond the area or scope of the project that may result from this use of explosives.

B. All blasting shall be done under the supervision of a Licensed Blaster and subject to State, Federal, including the Department of Labor and Industry, county or local regulations for blasting. Whenever any pipe main or conduit is encountered in the trench, all material within five feet of the same shall be removed by some method other than blasting or as otherwise governed by the owner of the utility.

C. The Contractor will be responsible for the depths to which all blasting is performed.

D. Should any street paving adjoining any trench be damaged in consequence of the Contractor's blasting operations, he shall immediately cease his blasting operations and repair the damaged street paving; also, he shall not again proceed with any blasting until he has submitted to and obtained approval from the Authority.

3.12 BRACED AND SHEETED TRENCHES:

A. Open cut trenches shall be sheeted and braced as required by any governing Federal and State laws, and municipal ordinances, and as may be necessary to protect life, property or the work. The cost of furnishing, placing and removing the sheeting and bracing necessary to protect life, property or the work shall be included in the bid price for the pipe.

3.13 CAUTION IN EXCAVATION:

A. The Contractor shall proceed with caution in the excavation and preparation of the trench so that the exact location of underground structures, both known and unknown, may be determined, and he shall be held responsible for the repair of such structures when broken or otherwise damaged because of carelessness on his part.

3.14 SUBSURFACE EXPLORATIONS:

A. Whenever, in opinion of the Authority, it is necessary to explore and excavate to determine the location of existing underground structures, the Contractor shall make explorations and excavations for such purposes. If the Contractor is required to perform additional work in making the explorations and excavations, the cost of said work shall be borne by the Contractor.

3.15 PIPE BEDDING:

A. The trench shall be excavated to a depth of six inches below the outside diameter of the pipe barrel, or deeper if so specified. The resultant subgrade shall be undisturbed. The bedding shall then be prepared by placing a thoroughly compacted Class 1S material in 6-inch uncompacted layers to 12-inches above top of pipe. Bedding shall provide uniform and continuous bearing and support for the pipe at every point between bell holes.

3.16 CONCRETE CRADLE AND CONCRETE ENCASEMENT:

A. The trench shall be excavated to a depth of 6 inches below the outside of the barrel of pipes 24 inches or less and 9 inches below the outside of the barrel of pipes larger than 24 inches in diameter. All of this excavation may be done by machine. Quality of concrete and method of placement is specified elsewhere.

3.17 UNSTABLE SUBGRADE:

A. Where the bottom of the trench at subgrade is found to be unstable or to include ashes, cinders, any type of refuse, vegetable or other organic material, or large pieces of fragments of inorganic material which, in the opinion of the Authority, should be removed, the Contractor shall excavate and remove such unsuitable material to the width and depth recommended by the Authority. Before pipe is laid, the subgrade shall be made by backfilling with Class 1S material in 6-inch uncompacted layers, thoroughly tamped and the bedding prepared as hereinbefore specified.

B. When the bottom of the trench is wet, the Contractor has the option of using either No. 8 or No. 57 aggregate for 1S material.

3.18 SPECIAL FOUNDATIONS:

A. Where the bottom of the trench at the subgrade is found to consist of material which is unstable to such a degree that, in the opinion of the Authority, it cannot be removed and replaced with an accepted material thoroughly compacted in place to support the pipe properly, the Contractor shall construct a foundation for the pipe, consisting of piling, timber or other materials, in accordance with Authority Specifications.

3.19 EXCAVATION IN FILL:

A. When the pipe is laid in fill, the compacted embankment shall be brought to a height of at least 12 inches above the proposed top of the pipe before the trench is excavated.

3.20 EXCAVATION METHODS:

A. General: Backfilling shall not be done in freezing weather except by permission of the Authority, and it shall not be made with frozen material. No fill shall be made where the material already in the trench is frozen. Any consolidation method utilizing water, such as jetting or puddling shall not be permitted.

B. Backfill Beneath and to Centerline of Pipe Class Class 1S Material: All trenches shall be backfilled by hand, from the bottom of the trench to the centerline of the pipe with Class 1S material placed and compacted with hand-operated mechanical tampers in loose layers of not more than four inches in depth to provide specified compaction around and under the haunches of the pipe. Backfill material shall be deposited in the trench for its full width on each side of the pipe and fittings simultaneously. All backfill material shall be compacted to a minimum density of 95% proctor (ASTM D 1577).

C. Backfill over Pipe - Class 1 and Class 1S Material: From the centerline of the pipe and fittings to a depth of one foot above the top of the pipe, the trench shall be backfilled by hand or accepted mechanical methods. The Contractor shall use special care in placing this portion of the backfill to avoid injuring or moving the pipe. The backfill shall be placed and compacted with hand-operated mechanical tampers in loose layers of not more than four inches in depth to provide specified compaction around and over the haunches of the pipe. Backfill in this section of the trench shall be with Class 1 or Class 1S material unless otherwise specified. Class 1 backfill shall be used for 6-inch pipe and larger while Class 1S backfill shall be used for 4-inch pipe and smaller. Backfill material shall be compacted to a minimum density of 95% proctor (ASTM D 1577).

3.21 BACKFILL TO RESTORATION DEPTH:

A. State and Township Roads Including Driveways - Class 1/1S Material: From one foot above the top of the pipe to restoration depth, the trench shall be backfilled by hand or by accepted mechanical methods. Backfill in this section of the trench shall be Class 1/1S material. Contractor shall submit, prior to beginning construction, a list of the compaction equipment to be utilized on the project, the recommendations of the equipment manufacturer as to the maximum lift thickness that can be placed, and the method of compaction. In no case shall lift thickness placed exceed the limits specified by the manufacturer's recommendations or a maximum of two feet, which ever is the smaller. However, if the equipment manufacturer's specified compaction is followed and the specified compaction is not obtained, the Contractor shall, at his own expense, remove, replace and retest as many times as is required to obtain the specified compaction. Consolidation shall proceed from the center of the trench to the sides to prevent arching. Backfill material shall be compacted to a minimum density of 95% proctor (ASTM D1557).

B. Lawn, Meadows and Cultivated Fields - Class 2 Material: From one foot above the top of the pipe to restoration depth, the trench shall be backfilled by hand or by accepted mechanical methods. Backfill in this section of the trench shall be Class 2 material. Contractor shall submit, prior to beginning construction, a list of the compaction equipment to be utilized on the project, the recommendations of the equipment manufacturer as to the maximum lift thickness which can be placed, and the method of compaction to be used with this equipment to achieve the required compaction. In no case shall lift thickness place exceed the limits specified by the manufacturer's recommendations or a maximum of two feet, whichever is the smaller. However, if the equipment manufacturer's specified compaction is followed and the specified compaction is not obtained, the Contractor shall, at his own expense, remove, replace and retest as many times as is required to obtain the specified compaction. Consolidation shall proceed from the center of the trench to the sides to prevent arching. Backfill material shall be compacted to a minimum density of 95% proctor (ASTM D 1557).

3.22 CLEAN-UP:

A. During construction, the surfaces of all areas including, but not limited to, roads, streets and driveways shall be maintained on a daily basis to produce a safe, desirable, and convenient condition. Streets shall be swept and flushed after backfilling and recleaned as dust, mud, stones and debris caused by the work, or related to the work again accumulates. Failure of the Contractor to perform this work shall be cause for the Authority to order the work by others, and back charge all costs to the Contractor.

B. All surplus materials furnished by the Contractor and temporary structures shall be removed from the site by the Contractor. All dirt, rubbish and excess earth from the excavation shall be disposed of by the Contractor in a manner and place acceptable to all governing agencies.

The construction site shall be left clean at the end of each working day to the satisfaction of the Authority. All surplus materials furnished by the Authority and delivered to the site by the Contractor shall be removed and delivered by the Contractor to a location designated by the Authority. All surplus materials furnished and delivered by the Authority will be removed by the Authority.

C. In the execution of this work, the Contractor shall conform to the approved erosion and sedimentation control plan.

3.23 RESTORATION OF UNPAVED AREAS:

A. The Contractor shall crown to such height as required by the Authority the top of all backfilled excavation in all unpaved areas, where such areas are not used as a way for vehicles.

3.24 RESPONSIBILITY FOR CONDITION OF EXCAVATION:

A. The Contractor shall be solely responsible for the condition and results of all excavations made by him. All slides and cave-ins shall be removed by the Contractor at whatever time and under whatever circumstances they may occur.

B. The failure or refusal of the Authority to suggest the use of bracing or sheeting; or a better quality, grade or section, or larger sizes of steel or timber; or to suggest sheeting, bracing, struts, or shoring to be left in place, shall not in any way or to any extent relieve the Contractor of any responsibility concerning the condition of excavation or any of his obligations, nor impose any liability on the Authority Engineer or the Authority; nor shall any delay, whether caused by any action or want of action on the part of the Contractor, or by any act of the Authority Engineer, Authority or their agents or employees resulting in the keeping of an excavation open longer than would otherwise been necessary, relieve the Contractor from the necessity of properly and adequately protecting the excavation from caving or slipping, nor from any of his obligations relating to injury of persons or property.

3.25 PROTECTION OF UTILITIES, PROPERTY AND STRUCTURES:

A. The Contractor shall notify all utility companies in advance of construction to include requesting the utilities to be located in accordance with Pennsylvania Act 187, and cooperate with agents of these companies during the progress of the work. Procedures for emergency action and repairs to utilities shall be established with the utility company prior to commencement of the work. During the course of his work, if the Contractor damages any of the aforementioned utilities, he shall immediately follow the procedure of emergency action and repair as established at his own expense.

B. Whenever the Contractor, during the progress of the excavation, shall uncover service pipes or lines, which because of injury or age are in poor condition, he shall immediately notify the proper authority in order that steps may be taken for replacement or repair. Locations of repairs, and the procedures of repairs that have been made shall be recorded by the Contractor.

C. The Contractor shall, at his expense, sustain in their places and protect from direct or indirect injury all pipes, conduits, tracks, walls, buildings and other structures or property in the vicinity of his work, whether above or below the ground, or that may appear in the trench. He shall at all times have a sufficient quantity of timber and plank, chains, ropes, etc. on the ground and shall use them as necessary for sheeting his excavations and for sustaining or supporting any structures that are uncovered, undermined, endangered, threatened or weakened, whether such structures are or are not shown on the drawings.

D. Pipes and underground conduits exposed as a result of the Contractor's operations shall be adequately supported along their entire exposed length by timber or planking, installed in such a manner that the anchorage of the supporting members will not be disturbed or weakened during the backfilling operation. Backfill of selected material shall be carefully rammed and tamped under and around the supports and all supports shall be left in place as a guard against breakage of the supported structure due to trench settlement.

E. Where necessary, in order to keep one side of the street or roadway free from any obstruction or to keep the material piled alongside of the trench from falling on private property outside the right-of-way, a safe and suitable fence shall be placed alongside the trench.

3.26 REMOVAL OF OBSTRUCTIONS:

A. Should the position of any pipe, conduit, pole or other structures above or below the ground be such as, in the opinion of the Authority, to require its removal, realignment or change will be done by the Contractor or will be done by the Owner of the obstructions, however, should this work be done by the Owner of the obstructions, the Contractor shall uncover and sustain the structures before such removal and before and after such realignment or change as constituting part of the work of the project.

B. The Contractor shall break through and reconstruct, if necessary, the invert or arch of any sewer, culvert or conduit that may be encountered, if the said structure is in such a position that in the judgment of the Authority, as not to require its removal, alignment or complete reconstruction.

C. The Contractor shall not interfere with any persons, firms or corporations, or with the Authority in protecting, removing, changing or replacing their pipes, conduits, poles or other structures; but he shall suffer said persons, firms or corporations, or the Authority to take all such measures as they may deem necessary or advisable for the purpose aforesaid. At

railway or railroad track crossings, any expense to which the owner of the trackage is put, in shoring up tracks, or in maintaining traffic shall be borne by the Developer and/or Contractor whether the same is billed directly to them or to the Authority.

D. Trees in rights-of-way shall not be cut down except by authorization of the Authority.

E. Shrubbery which would interfere with the construction shall be carefully removed, protected and replanted or replaced by the Contractor.

3.27 REPLACEMENT OF STRUCTURES BY CONTRACTOR:

A. The Contractor shall restore (unless otherwise stipulated) all sidewalks, curbing, gutters, shrubbery, fences, poles, sod or other property and surface structures removed or disturbed as part of the work to a condition equivalent to that before the work began, furnishing all labor and materials incidental thereof.

B. Replacement of curbs, sidewalks, gutters and drainage structure shall be in full accordance with the applicable specifications of the current Subdivision and Land Development Ordinance of Penn Township.

END OF SECTION

G:\BEng-Data\Projects\13-103-01\Specification Revisions\02201.doc

SECTION 02665

WATERMAINS AND APPURTENANCES

SECTION 02665 - WATERMAINS AND APPURTENANCES

PART 1 - GENERAL

1.1 Related Sections:

Section 02201 - Trench Excavation and Backfill

1.2 DESCRIPTION OF WORK:

A. The work within this section includes, but is not limited to, the furnishing of all equipment, labor and material, and in performing all operations in connection with the installation of water mains, valves, fire hydrants, manholes, joint materials, water services and appurtenances, and in performing all tests required, complete, in accordance with the specifications, applicable drawings, and contract documents.

1.3 QUALITY ASSURANCE:

A. Referenced standards shall be the following:

1. American National Standard Institute (ANSI)
2. American Society for Testing and Materials (ASTM)
3. American Water Works Association (AWWA)

1.4 SUBMITTALS:

A. Certificates: Contractor shall submit three (3) copies of each manufacturer's certification attesting that the materials meet or exceed specification requirements.

B. Shop Drawings: Submit manufacturer's descriptive and technical product data for pressure pipe, fittings, etc. prior to the start of work for approval in accordance with Section 01300.

PART 2 - PRODUCTS

2.1 DUCTILE IRON PIPE AND FITTINGS:

A. Pipe: All pipe shall be ductile iron in full accordance with the Standard Specifications as set forth in the ANSI Specification A21.51 or AWWA Specifications C151, latest edition, with wall thickness in full accordance with the Standard Specifications as set forth in the ANSI Specification A21.50 or AWWA Specification C150, latest edition.

B. Thickness: Minimum pipe thickness shall be Class 52 for all pipe and fittings.

C. Joints: Joints shall be of the push-on type or mechanical joint type in full accordance with ANSI A21.11 or AWWA C111 Specifications, latest edition.

D. Linings: Cement mortar linings shall be in full accordance with ANSI Specification A21.4 and AWWA C104, latest edition, except the thickness of linings should not be less than the following:

3" through 12"	1/8"
14" through 24"	3/16"

E. Encasement: Polyethylene encasement shall be in accordance with ANSI/AWWA C105-77 Specifications, latest edition.

F. Fittings: All fittings shall be ductile iron in full accordance with the Standard Specification set forth in the ANSI A21.10 or AWWA C110 Specifications, Latest Edition.

G. An alternative to ductile iron fittings may be Harco Ductile Iron Mechanical Joint Fittings. The fittings shall be designed to 350 psi working pressure, Class 53 ductile iron, ASTM A536-72, Grade 80-55-06 Ductile Iron.

H. Restrained Joints: Restrained joint pipe and fitting shall meet the specifications contained herein. Restrained joints shall be capable of being deflected after assembly. The joints shall be designed for a water working pressure of 350 psi.

I. Mechanical Joint Retainer Glands: Retainer glands shall be U.L. listed ductile iron meeting AWWA C11-64 (ASAA21.11) and of adequate construction to withstand twice the rated working pressure of the adjoining pipe or fitting, whichever is greater. Set screws shall be heat treated A151 4140 steel. All components of dissimilar metal shall be protected from corrosion by hand application of a bituminous coating.

J. Tie-Rods: The rods shall be constructed of suitable material and adequate dimensions to withstand at least twice the rated working pressure of the adjoining pipe or fitting, whichever is greater. All components of dissimilar metal shall be protected from corrosion by hand application of a bituminous coating.

2.2 VALVES:

A. Gate Valves: Valves shall be iron body compression resilient seated disc type with restrained joint ends as called for on the plans. All buried valves shall be non-rising stem type with "O" rings. The design of the valve and seal plate shall be such that the seal plate can be fitted with new "O" rings while the valve is under pressure in the fully open position. Valves shall be equipped with a 2-inch square operating nut and adjustable cast iron valve boxes and covers as herein specified. Gate valves shall open counter-clockwise. Gate valves shall be manufactured

in accordance with the latest revision of AWWA Specification C-500 as minimum requirement, and shall be as manufactured by American Darling, CRS-80, or approved equivalent.

B. Check Valves: Valves shall be standard iron body swing type with straightaway passages for full pipe area. Valves shall be bronze mounted with self-adjusting rubber or leather-faced discs. Valves shall be either plain type or equipped with outside lever and shall have joint ends as shown on the plans. Check valves shall be manufactured in accordance with AWWA C508.

C. Air Release Valve: The work shall include the complete assembly with tap, shutoff valve, blowoff, air valve, piping with fittings and union, all complete and ready for operation. Air valves shall be a special stainless steel float enclosed in the valve body with an attached lever for opening and closing the air discharge port. The design of the float and lever shall be such as to ensure opening of the valve port under maximum internal pressure. The assembly shall neither leak nor the valve sticks under service conditions. All components of the valve assembly shall be stainless steel material. A.R.I. Valves, Inc., or approved substitution.

D. Valve Boxes: Valve boxes shall be adjustable roadway type constructed of cast iron with a 5-1/4 inch shaft provided with screw type extension pieces and either round or oval detachable base. Box shall have a plug lid fitting into a recessed seat. The lid shall have the word "WATER" cast on the top surface. All parts of the box shall be of tough gray iron, free from cold shuts and blow holes and shall be painted with black bituminous paint. Valve boxes shall be set at or above the surface of the adjoining ground or roadway.

2.3 HYDRANTS:

A. Hydrants shall be cast iron body, fully bronze mounted, suitable for a working pressure of 150 lbs. per square inch, and shall be in accordance with the latest specifications of the AWWA. Hydrants shall be constructed in a manner permitting withdrawal of internal working parts without disturbing the barrel or casing. Valve, when shut, shall be reasonably tight when upper portion of barrel is broken off. Valve opening shall be at least 4.5 inch in diameter, with net area of waterway at smallest, with valves wide open, not less than 120% of valve opening. Each hydrant shall be tested to a hydrostatic pressure of 350 lbs. per square inch with valve in both open and closed positions.

B. The standpipe shall be connected to the ground line either by a frangible coupling or by flanges with frangible cast iron bolts. The main valve rod at the ground line shall be connected employing a frangible coupling. Hydrants shall be provided with an "O" ring type seal plate. The seal plate shall be fitted with at least two "O" rings. The lower "O" ring shall serve as the pressure seal and the upper "O" ring as combined dirt and moisture seal.

2.4 WATER SERVICE LINES:

A. Multiple service to more than one property for a water service line is not permitted. A single water connection to the Authority's system for each property is required.

B. Water service lines shall be in conformance with ASTM B88, Type K, for ¾ inch to 2 ½ inch lines. Water service lines listed below in the Water Supply and Distribution section of the International Plumbing Code may be substituted with specific Authority approval.

MATERIAL	**STANDARD**
Brass pipe	ASTM B 43
Chlorinated polyvinyl chloride (CPVC) plastic pipe and tubing	ASTM D 2846; ASTM F 441; ASTM F 442; CSA B137.6
Copper or copper-alloy pipe	ASTM B 42; ASTM B 302
Copper or copper-alloy tubing (Type K, WK, L, WL, M or WM)	ASTM B 75; ASTM B 88; ASTM B 251; ASTM B 447
Cross-linked polyethylene (PEX) plastic tubing	ASTM F 876; ASTM F 877; CSA B137.5
Cross-linked polyethylene/aluminum/cross-linked polyethylene (PEX-AL-PEX) pipe	ASTM F 1281; ASTM F 2262; CAN/CSA B137.10M
Cross-linked polyethylene/aluminum/high-density polyethylene (PEX-AL-HDPE)	ASTM F 1986
Ductile iron pipe	AWWA C151/A21.51; AWWA Cl15/A21.15
Galvanized steel pipe	ASTMA53
Polyethylene/aluminum/polyethylene (PE-AL-PE) composite pipe	ASTM F 1282
Polypropylene (PP) plastic pipe or tubing	ASTM F 2389; CSA B137.11
Stainless steel pipe (Type 304/304L)	ASTM A 312; ASTM A 778
Stainless steel pipe (Type 316/316L)	ASTM A 312; ASTM A 778

C. Service Line Fittings: Threads for underground service line fittings shall be in full accordance with AWWA C800.

D. Corporation Cocks: Inlet thread shall be Mueller or iron pipe type as directed, with flange union couplings or wiped joints. Type shall be Mueller or approved substitution.

E. Curb Stops: Ground key for use with copper water service. Make shall be Mueller or approved substitution.

F. Curb Boxes: Extension type with the stationary rod. Pattern shall be approved by Authority. The boxes and lids shall be coated with bituminous enamel. Extension range shall be 42 inches to 60 inches.

2.5 MISCELLANEOUS:

A. Concrete Thrust Blocks: Thrust blocks shall be in accordance with the latest revision of ANSI/AWWA C600 and shall be constructed to the dimensions shown on the plans. Care shall be taken during the concrete placement so that no joint nuts and bolts come in contact with the concrete.

B. Tapping Sleeves and Valves: Tapping sleeves and valves shall be of the sizes shown on the drawings and shall be designed to operate at a working pressure of 200 psi unless otherwise

specified. The valves shall be inside screw, iron body, compression resilient seated disc with either mechanical joint or hub ends and 2-inch square operating nuts. Valves shall open to the left.

C. Brick: Brick for frame and cover adjustment shall be new, whole, common brick, furnished in accordance with ASTM Specification C62, Grade MW.

D. Mortar: Mortar for jointing and plastering the outside of brick manholes shall consist of one part Portland cement and two parts fine sand. For brickwork, lime may be added to the mortar in an amount of not more than 25% of the volume of the cement. Sand shall be clean and sharp and conform to the ASTM Specification C-144. Hydrated lime shall conform to ASTM Specification C-6. Retempered mortar or mortar which has been mixed for more than 45 minutes shall not be used.

E. Concrete: Concrete shall have a compressive strength of not less than 3,000 psi after 28 days (tests to be in accordance with Standard Method of Compression Tests of ASTM).

F. Cast Iron: Gray iron castings shall be manufactured from iron conforming to ASTM A48, Class 35B, as noted in section 3.1 of AASHTO M306. The iron material used in products provided shall have a minimum recycled material content of 75%. The recycled materials shall consist of post-consumer material.

G. Frames/Covers: Manhole frame and cover shall be of soft gray iron equal, as manufactured by the East Jordan Iron Works Inc. frame model 156510, cover model 156525 or approved equivalent. Manhole frame and cover shall be accepted by the Authority and shall have the word "WATER" cast in the center. Castings shall be of uniform quality, free from sand holes, gas holes, shrinkage, cracks and other surface defects. Castings shall be reasonably smooth and well cleaned by shot blasting. Surfaces of the castings shall be free from burned-on sand and shall be reasonably smooth. Runners, risers, fins and other cast-on pieces shall be removed from the castings and such areas shall be ground smooth. Bearing surfaces between manhole rings and covers shall be cast or machined with such precision that uniform bearing shall be provided throughout the perimeter area of contact. As-cast dimensions may vary within accepted foundry tolerances as outlined in the iron castings handbook published by the American Foundrymen's Society, Inc. nominally, casting dimensional tolerances shall be +/- 1/16 inch per foot. All published casting weights are average and approximate values and may vary +/- 5%.

2.6 INSPECTION:

A. Field Inspection: All pipe and appurtenances shall be furnished, installed and tested for defects in material and/or workmanship in the manner specified and in the presence of and as accepted by the Authority.

B. Disposition of Defective Material: All material found during the progress of the work to have cracks, flaws or other defects will be rejected by the Authority. All defective materials furnished by the Contractor shall be promptly removed by him from the site at his own expense.

2.7 HANDLING OF MATERIAL:

A. Replacement of Damaged Material: The Contractor shall replace, at his own expense, all material furnished by him and found defective in manufacture or damaged in handling after delivery by the manufacturer. This shall include the furnishing of all materials and labor required for replacement of installed material. Any material furnished by the Authority that becomes damaged after acceptance by the Contractor shall be replaced by the Contractor at his own expense.

B. Responsibility for Safe Storage: The Contractor shall be responsible for the safe storage of material furnished by or to him, and accepted by him, and intended for the work, until it has been incorporated in the completed project. The interior of all pipe, fittings and other accessories shall be kept free from dirt and foreign matter at all times. All equipment and materials subject to damage from freezing shall be drained and stored in a manner which will protect them.

C. Hauling: All materials furnished by the Contractor shall be delivered and distributed at the site by the Contractor. Materials furnished by the Authority shall be picked up by the Contractor at points designated and hauled to and distributed at the site.

D. Care of Pipe Coating and Lining: Pipe shall be handled so the lining will not be damaged. If, however, any part of the lining is damaged, the repair shall be made by the Contractor at his expense in a manner satisfactory to the Authority.

PART 3 - CONSTRUCTION

3.1 MAINTENANCE OF FLOW:

A. The Contractor shall be responsible for coordinating and maintaining construction of all existing watermains, water services and fire hydrants. The Contractor shall submit his plans for maintenance of flow prior to the start of construction for approval by the Authority.

3.2 PIPE INSTALLATION:

A. General: All pipe shall be laid and maintained to the required lines and grades with fittings and valves at the required locations; spigots centered in bells; and all valves plumb. The pipe shall be laid in the backfill materials as specified. Pipe laying shall commence at the lowest point and proceed upgrade.

B. Caution in Excavation: The Contractor shall proceed with caution in the excavation and preparation of the trench so that the exact location of underground structures, both known and unknown, may be determined, and he shall be held responsible for the repair of such structures when broken or otherwise damaged because of carelessness on his part.

C. Depth of Pipe: All pipe shall be laid to the depth shown on the contract drawings or a minimum of 4.0 feet from finished grade to the crown of pipe.

D. Handling of Water Main Material Into Trench: Proper implements, tools and facilities satisfactory to the Authority shall be provided and used by the Contractor for the safe and convenient prosecution of the work. All pipe, fittings, valves, etc., shall be carefully lowered into the trench piece by piece by means of a derrick, ropes or other suitable tools or equipment, in such a manner as to prevent damage to sewer line materials, protective coatings and linings. Under no circumstances shall such materials be dropped or dumped into the trench.

E. Hammer Test: The pipe and fittings shall be inspected for defects and while suspended above grade, be rung with a light hammer to detect cracks.

F. Cleaning Pipe and Fittings: All lumps, blisters and excess coal tar coating shall be removed from the bell and spigot end of each pipe, and the outside of the spigot and the inside of the bell shall be wire-brushed and wiped clean and dry and free from oil and grease before the pipe is laid.

G. Laying Pipe: Every precaution shall be taken to prevent foreign material from entering the pipe while the pipe is being placed in the line. If the pipe-laying crew cannot put the pipe into the trench and in place without getting into it, the Authority may require that before lowering the pipe into the trench, a heavy, tightly woven canvas bag of suitable size shall be placed over each end and left there until the connection is to be made into the adjacent pipe. During laying operations, no debris, tools, clothing or other materials shall be placed in the pipe.

H. Cutting Pipe: The cutting of pipe for inserting valves, fittings or closure pieces shall be done in a neat and workmanlike manner, without damage to the pipe, so as to leave a smooth end at right angles to the axis of the pipe.

I. Permissible Deflection of Joints: If deflection is required, make after joint is assembled. The amount of deflection shall not exceed 50% of the maximum limits as specified in the AWWA Standard C600, latest revision.

J. Unsuitable Conditions for Laying Pipe: No pipe shall be laid in water or when, in the opinion of the Authority, trench conditions are unsuitable.

K. Variations: The Authority reserves the right to vary the line and/or grade from that shown on the drawings for the pipe lines and manholes and to vary the location of fittings, valves and hydrants when such changes may be necessary or advantageous.

L. Mechanical Joints: The spigot end of the pipe shall be centrally located in the bell so that the rubber gasket is evenly seated.

M. All loose rust or foreign matter shall be removed from the inside surfaces of the bell and outside surface of the spigot prior to assembly. Bolts shall be tightened uniformly with a ratchet wrench so as to effect the joint seal. The normal range of bolt torques to be applied are:

Bolt Size-Inches	Torque-Ft. Lbs.
5/8	45 - 60
3/4	75 -90
1	100 - 120
1-1/4	120 - 150

N. If effective sealing is not attained at the maximum torque indicated above, the joint shall be disassembled and reassembled after thorough cleaning.

O. Push-On Type Joints: The joint shall be assembled as recommended by the manufacturer so as to effect the joint seal.

3.3 FITTINGS AND VALVES:

A. General: Valves and fittings shall be set and jointed to pipe in the manner heretofore specified for cleaning, laying and jointing pipe.

B. Valve Boxes and Valve Pits: A cast iron valve box or a masonry pit shall be provided for every valve as shown on the plans. A valve box shall be provided for every valve which has no gearing or mechanism or in which the gearing or operating mechanism is fully protected with a cast iron grease case. The valve box shall not transmit shock or stress to the valve and shall be centered and plumb over the wrench nut of the valve, with the box cover flush with the surface of the finished pavement or such other level as may be directed.

C. Drainage of Mains: Mains shall be drained through drainage branches or blow-offs to dry wells from which the water can be pumped. Drainage branches, blowoffs, air vents, and appurtenances shall be provided with gate valves and shall be located and installed as shown on the plans.

3.4 HYDRANTS:

A. Location: Hydrants shall be located as shown on the plans or as directed by the Authority in a manner to provide complete accessibility and so that the possibility of damage from vehicles or injury to pedestrians will be minimized.

B. When placed behind the curb, the hydrant barrel shall be set so that no portion of the pumper or hose nozzle cap will be less than 6-inches or more than 12-inches from the gutter face of the curb.

C. When set in the lawn space between the curb and sidewalk, or between the sidewalk and the property line, no portion of the hydrant or nozzle cap shall be within 12-inches of the sidewalk.

D. Position: All hydrants shall stand plumb and shall have their nozzles parallel with or at right angles to the curb, with the pumper nozzle facing the curb, except that hydrants having two hose nozzles 90° apart shall be set with each nozzle facing the curb at an angle of 45 degrees. Hydrants shall be set to the established grade, with the nozzles at least 12 inches above the ground, as shown or as directed by the Authority.

E. Connection to Main: Each hydrant shall be connected to the main with a 6-inch cast iron branch controlled by an independent 6-inch gate valve except as otherwise directed.

F. Hydrant Drainage in Pervious Soil: Wherever a hydrant is set in soil that is pervious, drainage shall be provided at the base of the hydrant by placing coarse gravel or crushed stone mixed with coarse sand, from the bottom of the trench to at least 6 inches above the waste opening in the hydrant and to a distance of 1-foot around the elbow.

G. Hydrant Drainage in Impervious Soil: Wherever a hydrant is set in clay or other impervious soil, a drainage pit 2-feet in diameter and 3-feet deep shall be excavated below each hydrant and filled completely with coarse gravel or crushed stone mixed with coarse sand, under and around the elbow of the hydrant and to a level of 6-inches above the waste opening.

3.5 ANCHORAGE:

A. Anchorage for Hydrants: The bowl of each hydrant shall be well braced against unexcavated earth at the end of the trench with stone slabs or concrete backing, or it shall be tied to rods or clamps as shown or as directed by the Authority.

B. Anchorage for Plugs, Caps, Tees, and Bends: All plugs, caps, tees, and bends deflecting 11-1/4 degrees or more on mains 6-inches in diameter or larger shall be provided with a reaction backing, or movement shall be prevented by attaching suitable metal rods or clamps as shown on the plans or as directed by the Authority. All lateral line valves shall be rodded to the main line tee with 3/4-inch threaded tie rods if a flanged or restrained joint is not utilized.

C. Reaction Backing: Reaction backing shall be concrete of a mix not leaner than 1 cement; 2-1/2 sand; 5 stone; and having a compressive strength of not less than 2,000 psi, at 28 days. Backing shall be placed between solid ground and the fitting to be anchored; the area of bearing on the pipe and on the ground in each instance shall be as shown on the plans or as directed by the Authority. The backing shall, unless otherwise shown or directed, be so placed that the pipe and fitting joints will be accessible for repair.

D. Vertical Reaction Blocking: All vertical reaction blocking shall be accepted by the Authority. Reaction blocking shall be used where any elbow or offset is used in vertical direction.

E. Tie Rods: Metal harness of tie rods of adequate strength to prevent movement shall be used. Steel rods/clamps shall be galvanized and painted with two coats of asphalt type paint.

3.6 CONCRETE CRADLE AND ENCASEMENT:

A. Preparation: Prior to the formation of the cradle or encasement, temporary supports consisting of solid concrete bricks or cap blocks shall have minimum dimensions and shall support the pipe at not more than two locations, one at the bottom of the barrel of the pipe adjacent to the shoulder of the socket and the other near the spigot end.

B. Placing: After jointing of the pipe has been completed, concrete shall be uniformly poured beneath and on both sides of the pipe. Placement shall be done by the use of suitable equipment. The concrete shall be wet enough during placement to permit its flow, without excessive prodding, to all required points around the pipe surface. The width of cradle shall be such as to fill completely the trench width. In case of extremely wide trenches, concrete encasement may be confined above the top of the pipe to a narrower width, but in no case shall it be less than the width of trench required for the size of pipe being used.

C. Before depositing concrete, the space within the limits of the pour shall have been cleared of all debris and water. Water shall not be allowed to rise adjacent to, or flow over, concrete deposited for less than 24 hours. Concrete shall be protected from the direct rays of the sun and kept moist by a method acceptable to the Authority, for a period of 7 days or until backfilling is begun. In no case shall backfill begin within 36 hours of the time of placing and the Authority shall have strict control of the rate of backfilling.

3.7 BLOWOFF CONNECTION:

A. Unless otherwise shown on the drawings or specified, each blowoff shall consist of a gate valve and box of the same size as the watermain, a reducer where necessary, 4-inch bend drilled for drainage, piece of 4-inch pipe rising to the surface and a valve box telescoped over the riser pipe. Blowoffs shall not be connected to any sewer, submerged in any other manner that will permit back siphoning into the distribution system.

3.8 VAULTS/PITS:

A. General: Water system vaults/pits shall be constructed of precast concrete units with cast iron frames and covers in the locations shown on the drawings or as directed by the Authority and in accordance with the construction details. Shop drawings shall be submitted by the Contractor for the Authority's review.

B. Concrete or mortar shall conform to the requirements specified herein.

C. Frames, Covers and Steps: Cast iron frames and covers and manhole steps shall conform to the drawings in all essentials of design. Standard castings differing in nonessential details and accepted by the Authority will be acceptable. Frames and covers shall be machined to produce a tight, rattleproof fit. The frames and covers shall be set that the top of the cover will be flush with or higher than the finished grade as directed by the Authority. Steps when shown on drawings or specified shall be furnished and set as manhole construction progresses.

3.9 WATER SERVICE LINES:

A. To avoid cutting or excavating the existing roadway, all services less than 4 inches shall be bored with an auger or pushed through a drive pipe. (The drive pipe may be removed when the service is installed.) Where rock or other obstructions are encountered, the location of the service line may be moved as much as is necessary.

3.10 HYDROSTATIC TESTS:

A. Leakage Test: After the pipe has been laid and backfilled as specified, all newly laid pipe or any valves section thereof, shall be subjected to a hydrostatic pressure of 150 pounds per square inch, or 50% in excess of the normal working pressure, whichever is greater.

B. Leakage is defined as the quantity of water to be supplied into the newly laid pipe, or any valved section thereof, necessary to maintain the specified leakage test pressure after the pipe has been filled with water and the air expelled.

C. No pipe installation will be accepted until the leakage is less than the number of gallons per hour as determined by the formula

$$L = \frac{ND(P)^{1/2}}{7400}$$

in which "L" equals the allowable leakage in gallons per hour; "N" is the number of joints in the length of pipelines tested; "D" is the nominal diameter of the pipe, in inches and "P" is the average test pressure during the leakage test, in pounds per square inch gauge. (The allowable leakage according to the formula is equivalent to 23.3 US gallons per 24 hours per mile of pipe per inch nominal diameter, for pipe in 18-foot lengths evaluated on a pressure basis of 150 psi.) The duration of the test under pressure shall be two hours.

D. Procedure: Each valved section of pipe shall be slowly filled with water and the specified test pressure, based on the elevation of the lowest point of the line or section under test and corrected to the elevation of the test gauge, shall be applied by means of a pump connected to the pipe in a manner satisfactory to the Authority. The pump, pipe connections, and all necessary apparatus including gauges, shall be furnished by the Contractor. The Contractor will make all taps into the pipe and furnish all necessary assistance for conducting the tests.

E. Expelled Air Before Test: Before applying the specified test pressure, all air shall be expelled from the pipe. If hydrants or blow-off are not available at high places, the Contractor shall make the necessary taps at such points before the test is made and insert the plugs after the test has been completed.

F. Variation from Permissible Leakage: Should any test of pipe laid disclose leakage greater than that specified, the Contractor shall, at his own expense, locate, repair and replace the defective joints, pipe or fittings until the leakage is within the specified allowance.

G. Where any section of a main is provided with concrete reaction backing, the hydrostatic pressure test shall not be made until at least 5 days have elapsed after the concrete reaction backing was installed. If high early strength cement is used in the concrete reaction backing, the hydrostatic pressure test shall not be made until at least 2 days have elapsed.

H. The Authority shall be present during the operating of valves required to fill mains for pressure and leakage tests.

I. The Contractor shall schedule the pressure and leakage test at least 48 hours in advance of the test day with the Authority. No testing will be authorized unless air temperature is greater than 35 degrees F.

J. The pressure and leakage tests shall be monitored by the Authority.

K. The Contractor will furnish laboratory calibrated test gauge and measuring device for the leakage test.

L. All field joints of fittings, valves and hydrants shall be exposed and examined during pressure and leakage test.

M. Section under test shall be brought to test pressure of 150 psi at ½-hour intervals during the testing. The Authority will record both the makeup water pressure at each ½-hour repressurization.

N. If the test is applied against an existing valve and the Contractor has determined that said valve is passing, Contractor shall excavate valve at his expense so Authority can sound valve. In addition to the sound test, test section shall be valved off and post pressure applied. Authority will observe pressure for 24 hours. This section should remain at post pressure if valve is passing.

3.11 DISINFECTION OF LINES:

A. Preliminary Flushing: Prior to disinfection, the lines shall be flushed as thoroughly as possible with the water pressure and outlets available. Flushing shall be done after the line leakage test has been made. Disinfection shall be in full accordance with the latest revision of AWWA C651 and these specifications.

B. Chlorination of Completed Line: Before being placed in service, the entire line shall be chlorinated. Chlorine may be applied by the following methods: Liquid chlorine and calcium hypochlorite granules, sodium hypochlorite solution and calcium hypochlorite tablets.

C. The chlorinating agent shall be applied at the beginning of the section adjacent to the feeder connection and shall be injected through a corporation cock, hydrant, or other connection ensuring treatment of entire line.

D. Water shall be fed slowly into new line with chlorine applied in amounts to produce a dosage of 40 to 50 ppm. Mains previously filled shall be treated to a concentrated dosage at intervals along the line and retained for a period of 8 hours or more. A residual of not less than 5 ppm shall be produced in all parts of the line.

E. During the chlorination process, all valves and accessories shall be operated. After chlorination, the water shall be flushed from the line at its extremities until the replacement water tests are equal chemically and bacteriologically to those of the permanent source of supply.

F. Contractor shall review disinfection procedures and time tables with Authority at least 3 days prior to implementing them.

G. Liquid Chlorine: Chlorine gas-water mixture shall be applied by means of a solution feed chlorinating device. Chlorine gas shall be fed directly from a chlorine cylinder equipped with suitable device for regulating the rate of flow and the effective diffusion of gas within the pipe.

H. Calcium Hypochlorite: Calcium hypochlorite shall be comparable to commercial products known as HTH perchloren and maxochlor, a solution consisting of 5% of power to 95% of water by weight, should be prepared. The calcium hypochlorite and water mixture, first made into a paste and then thinned to a slurry, shall be injected or pumped into the newly laid line under the conditions specified hereinbefore.

I. Final Flushing: Following chlorination, all treated water shall be thoroughly flushed from the line, at its extremities, until the replacement water throughout its length, upon test, be proved comparable to the quality of water in the existing water system.

3.12 BACTERIOLOGICAL TESTS:

A. Chlorination of the completed line and two bacteriological tests shall be done at the expense of the Contractor as part of the construction contract. The tests shall be carried out by an approved laboratory and the results given to the Authority.

3.13 ABANDONMENT OF LINES AND SERVICES:

A. Line and services to be abandoned shall be cut free from their sources and permanently capped to prevent leakage. This work shall be performed in a manner approved by the Authority.

END OF SECTION

G:\BEng-Data\Projects\13-103-01\Specification Revisions\02665.doc

SECTION 02730

MANHOLES

SECTION 02730 - MANHOLES

PART 1 - GENERAL

1.1 Related Sections:

Section 02201 - Trench Excavation and Backfill

1.2 DESCRIPTION OF WORK:

A. The work within this section includes, but is not limited to, the furnishing of all equipment, labor, materials and performing all operations necessary to construct and install precast reinforced concrete round manholes including steps and frames and covers as directed by the Authority, in accordance with Authority Specifications.

1.3 QUALITY ASSURANCE:

A. Referenced standards shall be the following:

1. Pennsylvania Department of Transportation (PennDOT) Publication 408, Specifications and its revisions.
2. American Society for Testing and Materials (ASTM).
3. American Association of State Highway Transportation Officials (AASHTO).

1.4 SUBMITTALS:

A. Certificates: Contractor shall submit three (3) copies of each manufacturer's certification attesting that the materials meet or exceed specification requirements.

B. Shop Drawings: Submit detail shop drawings of manholes, frames and covers, manhole steps, manhole joint sealing material, and flexible watertight gaskets prior to the start of work for approval in accordance with Section 01300.

PART 2 - MATERIALS

2.1 GENERAL:

A. Materials for construction of manholes shall be new and unused and shall conform to the following.

1. Precast Reinforced Concrete Manhole Bases, Risers, Cones or Flat Slab Tops:

   a. Concrete and steel reinforcement used in the manufacture of precast manhole bases, risers, cones and flat slab tops shall conform to ASTM C478 (latest revision). Type II cement shall be used in the construction of the manhole components.

2. Cone sections shall be eccentric.

3. Provide two 3/4-inch diameter, threaded inserts for the frame hold down bolts. The inserts shall be cast into the top sections at the manufacturer's plant. Coordinate locations of inserts between the manhole manufacturer and the frame and cover manufacturer.

4. Through-wall lifting holes are not permitted. Provide factory installed lifting keys or lugs cast integrally in manhole components.

5. The entire outer surface shall be coated with bitumastic to a minimum thickness of 20 mils (including bottom). The manhole sections shall be precoated at the factory, however, the Contractor shall be required to complete any patching due to damage during installation.

6. PVC Coated Precast Reinforced Concrete Manhole Bases, Risers, Cones or Flat Slab Tops:

   a. Air release manholes and manholes to which forcemains or low pressure lines discharge to and the next four (4) manholes downstream shall be PVC coated as described below.

   b. PVC Liner system

      1.) PVC Coated Manholes shall be as manufactured by A-Lok Products, Inc., Tullytown, PA, (215) 945-5600, or pre-approved equal. The interior plastic liner for the precast manholes shall be Dura Plate 100. The Dura Plate 100 liner, when installed, shall provide a continuous, impermeable lining which will shield the precast concrete manhole against deterioration caused by corrosive material. The PVC Coated Manholes shall also meet all of the requirements specified for standard precast concrete manholes.

      2.) The design of the liner shall insure that it will conform to the contour of the manhole and form a permanent mechanical bond to the concrete through use of preformed horizontal ribs. The liner will be

formed in such a manner that the joints between the manhole sections will be afforded protection through the use of a continuous PVC return into the joint for a minimum ¾ of an inch. Provisions will be made to allow the pipe openings to be sealed.

3.) The liner shall be manufactured from Polyvinyl Chloride resin and shall be white in color. The compound will result in a semi-rigid material suitable for thermoforming to the contour of the manhole. The liner may be fabricated in panels with the panels joined together by a slotted strip of EDPM rubber according to the manufacture's specifications. All plastic liner sections shall be free of cracks, pinholes or other defects adversely affecting the protective characteristics of the material and shall have a minimum thickness of 65 mils.

4.) The Dura Plate 100 liner will be installed during the precasting process in accordance with the specific instructions of the manufacturer.

5.) The manhole manufacturer shall provide installation instructions to each contractor prior to initial use of the Dura Plate 100 liner. The manhole will be installed using a joint sealing material as later specified.

6.) The joint sealing material shall be placed on the joint surfaces as recommended by the manufacturer, to provide a watertight seal by filling the annular cavity, while providing sufficient squeeze-out between the PVC returns to protect against corrosion.

7.) Flexible, corrosion-resistant, watertight connections between manhole castings and precast concrete cones or flattops shall be installed for all PVC coated manholes. This connection shall be accomplished by Water-Lok Connectors, as manufactured by A-Lok Products, Inc., or approved equal. The connector shall allow flexibility in reaching finished grade and permit up and down movement to accommodate freeze/thaw conditions close to the ground surface without compromising watertightness. This shall be accomplished by utilizing two independent, corrosion-resistant PVC sleeves which telescope within each other to allow adjustment to the correct grade. A seal is created between the two independent sleeves by a system of neoprene o-rings. The top and bottom flanges of the Water-Lok Connector are sealed to their appropriate mating surfaces

by a preformed butyl gasket material furnished with the assembly. The Bolt Fastening Assembly shall be an anti-floating assembly.

8.) All interior concrete surfaces not covered by the PVC liner, including the flow channel and grade rings, shall be coated with two coats of epoxy-amine. Coating of the base shall overlap the liner by a minimum of 2-inches.

c. HDPE/PP-R Liner System

1.) Liner shall be AGRU Sure Grip® CPL system with HDPE/PP-R with a minimum thickness of 2 mm (0.0787 inch) as furnished by Terre Hill Concrete Products.

2.) All HDPE liner sheets and anchors shall be extruded during a single manufacturing process. Anchoring studs shall not be welded or mechanically attached to the liner. The minimum anchoring stud concentration shall be 39 studs per square foot. The anchoring stud shall have a pull out resistance of 112.5 lbs/stud.

3.) Flat non-anchored liner sheet, used for overlapping joints, shall have a minimum thickness of 3 mm (0.1181 inch). The cap strip shall be capable of spanning across a maximum gap of one inch that may occur at the joint between precast sections without damage to the lining.

4.) Manufacturer certified welders with extrusion welding equipment shall weld all final joints with extrusion welds.

5.) Physical Properties

i. The AGRU Sure Grip® CPL systems and welding rod shall be manufactured from the same resins and meet the following properties:

Property	Testing Method	Units	**HDPE**	**PP-R**
Density	ASTM D792	g/cm^3	0.0945	1.78
MFI (Melt Flow Index)	ASTM D1238	g/10min	(190/5)	(190/5)

Heat Reversion (Dimensional Stability)	ASTM D1637	%	<3	<3
Yield Stress	ASTM D638	PSI	≥2175	≥2900
Elongation of yield.	ISO527-3 specimen	1B%	≥10-	≥12
Elongation	ISO527-3 specimen	1B%	>450	>200
Fire Classification	UL-94		94-HB	94-HB
Maximum Working Temperature		^{o} C ^{o} F	60 140	90 194

ii. Upon request, the manufacturer shall provide written certification that the liner meets or exceeds the requirements of this specification.

iii. Liner material shall be fitted and secured in the form prior to placing the concrete.

iv. All joints within each precast section shall be sealed by extrusion welding performed by AGRU certified welders, before shipment to the job site. Joints between precast sections shall be welded in the field by Terre Hill Concrete Products; Taylor Precast; US-Precast; or certified equal.

v. Manhole steps shall not be used. Steps PS-6-ALF by MA Industries, Inc. or approved equal shall be used to suspend ladders only when indicated on the manhole schedule. The joint between the step and liner shall be shop welded as shown on the drawings.

6.) Assembly

i. The responsibility of providing a leak free precast structure rests on the utility contractor installing the lined structure. Welding cannot occur when concrete joints leak.

ii. Place only a single strip of gasket towards the exterior of the precast section joints to prevent entrapped air blowouts and oozing of the sealant on the liner surface.

7.) Field Welding

i. All welding shall be performed by AGRU certified welders in accordance with the published directives and procedures of the manufacturer. Completion of welding shall provide a monolithic concrete protective liner.

ii. The following welding methods are acceptable:

- Extrusion Welding (For all final welds)
- Wedge welding
- Butt welding
- Hot air welding

iii. The joint areas shall be clean, dry, and free of oil and lubricants. The prepared edges shall be free of chips and notches detrimental to maximum fusion of the weld.

iv. All welded joints shall be finish welded with an extrusion weld, spark tested for leaks and visually inspected.

7. Manhole Base Liner: The manhole base liner shall be a GU Manhole Liner System as manufactured by GU Florida, Inc., Sarasota, Florida. The GU liner shall be of one piece construction and of unlayered homogeneous fiberglass reinforced plastic (F.R.P.). The base liner shall provide (1) full flow channels with side walls to the crown of the pipe, (2) watertight gasketed bells to suit the specific pipe and grade alignment, (3) the inner surface of the bench to have an anti-skid surface and (4) the outer surface of the liner to be aggregate coated and have steel spirals bonded to the F.R.P. It shall be integrally cast into the precast concrete manhole to the correct line and grade as indicated on the drawing.

Installation of the Base liner in precast concrete manhole bases shall be in accordance with the manufacturer’s specifications by Terre Hill Concrete Products.

8. Concrete: Composition and compressive strength conforming to ASTM C478 except use Type II cement in manhole components and increase compressive strength to 4000 psi (at 28 days) in precast bases.

a. Openings in precast concrete manholes to accommodate the connection of piping shall be custom preformed for each manhole at the time of manufacture. Openings for connection of the piping shall be of the size and shape required for the particular type of seal provided.

b. All precast concrete manholes shall be designed to accommodate AASHTO highway load class HS-20

c. The tops of the precast bases shall be accurately formed to receive the tongue of the bottom precast concrete manhole section of the wall.

d. Precast top sections shall have hold down bolt inserts factory cast in the top section. Each top shall have four (4) three quarter (3/4) inch threaded inserts or slotted inserts to accommodate manhole frame hold down bolts. Insert types designed for an ultimate load in tension of 12,500 pounds. Coordinate insert locations in the top section to match the bolt hole locations on the manhole frame. All inserts shall be factory plugged before shipping.

9. Monolithic Poured-In-Place Concrete Bases:

a. Monolithic poured-in-place concrete bases shall be of the design dimensions indicated on the Detail Drawings.

b. Portland cement: ASTM C150 Type II, Moderate Sulfate Resistance.

c. Concrete used for poured-in-place manhole bases shall be of a 4,000 psi mix design.

d. Consistency: The concrete shall be of uniform consistency. The maximum allowable slump shall be 2-inches.

1) This strength requirement shall be verified by tests. At least one test shall be made once a day or one test per structure. A test shall consist of at least two cylinders whose 28-day compressive strengths shall be determined by an approved laboratory.

10. Concrete used for channels inside precast manhole bases shall be of a 3,500 psi mix design with a 5/8” diameter maximum allowable aggregate size.

a. Consistency: The mixed concrete shall be of uniform consistency. The maximum allowable slump shall be 1 inch.

b. Cement shall be Type II.

11. Steel Reinforcement:

    a. Steel reinforcement used in the manufacture of precast concrete manhole bases and precast riser and top sections shall conform to the requirements specified in Section 6 of ASTM C478.

12. Pipe Openings and Seals:

    a. Openings shall be preformed during manufacturing in each base and Riser section requiring a piped opening. Each opening shall accommodate the type of pipe and pipe seal required.

    b. Pipe opening seals shall meet the requirements specified in ASTM C923.

    c. Pipe opening seals integrally cast with holes for pipe in precast concrete manhole walls shall be all-rubber composition, flexible, pliable, and provide up to 15 degrees lateral, diagonal, or vertical pipe deflection. Gaskets shall be leak proof tested to 20 psi., and shall meet or exceed rubber quality standards of ASTM C-443.

    d. Pipe opening seals not cast with holes for pipe shall be pliable and permit deflection. A strong rubber coated steel center compression ring and a long rubber sleeve with a deep grove secured stainless steel clamp shall be used to create a positive seal.

    e. Rubber adapter ring for use on PVC pipe in poured-in –place manhole bases shall be recommended by the manufacturer.

    f. Manhole adapters shall be provided for all PVC pipe in cut-in pipe opening sand shall be recommended by the pipe manufacturer.

13. Frame Hold Down Bolts:

    a. Bolts, nuts, and washers shall be stainless steel in accordance with ASTM A307 and ASTM A276.

2.2 MANHOLE JOINT SEALING MATERIAL:

A. Joints between manhole sections shall be provided with double preformed plastic joint sealing material such as Rub-R-Nek, or approved equal. The chemical composition of the sealer shall be as follows: Bitumen, ASTM D477; Inert Ash Material, AASHTO T11142 (1974); Volatile Mater, ASTM D667 (1973).

2.3 FLEXIBLE WATERTIGHT GASKETS:

A. Bases shall have flexible watertight gaskets at the point of entry of sewer pipe into the manhole. The rubber materials shall conform to ASTM C443. The gaskets shall be cast into the manhole base to become an integral part of the concrete. The gaskets shall be Presswedge II as manufactured by Press-Seal Gasket Corporation, Dura-Seal II as supplied by Terre Hill Concrete Products, or equivalent.

B. Cutting of openings in precast manholes in the field will only be permitted where authorized by the Authority, and these openings shall be of proper size as required for the installation of a gasket type waterstop. Non-shrink grout shall be tightly placed into the annular space from both the inside and outside of the wall in such a manner as to completely fill the annular space and provide a watertight installation.

2.4 STANDARD FRAME AND COVER:

A. Manhole frame and cover shall be of soft grey iron with self sealing cover as manufactured by East Jordan Iron Works, Inc. frame model 104510, cover model 104172 or approved equivalent, machined and having the words "SANITARY SEWER" cast approximately in the center of the cover. Frames shall be securely attached to the top of the manhole section by four stainless steel anchor bolts at 180°C to C. Gray iron castings shall be manufactured from iron conforming to ASTM A48, Class 35B, as noted in section 3.1 of AASHTO M306. The iron material used in products provided shall have a minimum recycled material content of 75%. The recycled materials shall consist of post-consumer material. Joint material between the frame and manhole or grade ring shall be as specified in Manhole Joint Sealing Material.

2.5 WATERTIGHT FRAME AND COVER:

A. Watertight frame and cover shall be of soft grey iron as manufactured by East Jordan Iron Works, Inc. frame model 104512, cover model 104174 or approved equivalent, machined and having the words "SANITARY SEWER" cast approximately in the center of the cover. Lid shall be held in place using four stainless steel hexhead cap screws counter sunk into the lid. Frame shall be securely attached to the top of the manhole section by four stainless steel anchor bolts at 180° C to C. Gray iron castings shall be manufactured form iron conforming to ASTM A48, Class 35B, as noted in section 3.1 AASHTO M306. The iron material used in products provided shall have a minimum recycled material content of 75%. The recycled materials shall consist of post-consumer material. Joint material between the frame and manhole shall be as specified in Manhole Joint Sealing Material.

2.6 MANHOLE STEPS:

A. Contractor shall provide reinforced plastic, or approved equivalent, manhole steps for manholes.

B. Manhole steps shall be installed at the manufacturer's plant. Installation of manhole steps in the field shall not be permitted. Manhole steps shall be aligned vertically and spaced a maximum distance of 12 inches apart.

C. Reinforced plastic steps shall consist of 1/2-inch diameter deformed steel reinforcing bar completely encapsulated in polypropylene plastic. Reinforcing steel bar shall be Grade 60 as per ASTM A615 and the encapsulation material as per ASTM D2146-82, Type II, Grade 43758.

2.7 PRECAST CONCRETE MANHOLE GRADE RINGS:

A. Concrete manhole grade rings for leveling units shall be full circle and shall be manufactured as per ASTM C-478 and shall be as thick as necessary to provide the required grade adjustment. Each grade ring shall have two holes cast therein at the manufacturer's plant for the manhole frame hold down bolts. Joint material between grade rings shall be as specified in Manhole Joint Sealing Material.

B. Rubber Grade Rings:

1. Rubber grade rings (rubber adjustment riser) for leveling units shall comply with the following:

a. Density:

1) As specified in ASTM C 642-90.

b. Durometer Hardness:

1) As specified in ASTM D 2240.

c. Compression:

1) As specified in ASTM D 575.

d. Compression Set:

1) As specified in ASTM D 395.

e. Freeze and Thaw:

1) As specified in ASTM C 672-91.

f. Coefficient of Thermal Expansion:

1) As specified in ASTM C 5314-85.

g. Weathering (70 hours at 70°C):

1) As specified in ASTM D 573-88.

2. Tapered rubber grade rings shall be used to accommodate sloped paved surfaces.

C. Chemical Grout:

1. Cement grout shall be non-shrink non-metallic.

2. Use Type I cement where grout is not in contact with sewage.

3. Use Type II (Sulfate Resistant) cement where grout is in contact with sewage.

D. Waterproofing mortar:

1. Material composition meeting the requirements of ASTM C270, Type M with waterproofing admixture included.

2. Apply in accordance with manufacturer’s instructions.

E. Epoxy Bonding Compound

1. Provide a high-modulus, low viscosity, moisture insensitive epoxy adhesive having the following characteristics.

a. Mix Ratio: 100 percent solids, two components; mixed one part by volume component B to two parts by volume component B.

b. Ultimate Compressive Strength: 13,000 psi after cure at 73° F and 50 percent relative humidity determined in accordance with ASTM D695.

2.8 INSPECTION:

A. Field Inspection: All pipe and appurtenances shall be installed and tested for defects in material and/or workmanship in the manner specified and in the presence of, and as approved by the Authority.

2.9 HANDLING OF MATERIAL:

A. Replacement of Damaged Material: The Contractor shall replace, at his own expense, all material furnished by him and found defective in manufacture or damaged in handling after delivery by the manufacturer. This shall include the furnishing of all materials and labor required for replacement of installed material. Any material furnished by the Authority that becomes damaged after acceptance by the Contractor shall be replaced by the Contractor at his own expense.

B. Responsibility of Safe Storage: The Contractor shall be responsible for the safe storage of material furnished by or to him and accepted by him, and intended for the work until it has been incorporated in the completed project. The interior of all pipe, fittings and other accessories shall be kept free from dirt and foreign matter at all times. All equipment and materials subject to damage from freezing shall be drained and stored in a manner which will protect them.

C. Hauling: All materials furnished by the Contractor shall be delivered and distributed at the site by the Contractor. All materials furnished by the Owner shall be picked up by the Contractor at points designated by the Authority and hauled to and distributed at the site.

D. Pipe, fittings, items of equipment, and other materials of construction shall be loaded and unloaded by lifting with hoists or skidding to avoid shock or damage. Under no circumstances shall such materials be dropped. Materials handled on skidways shall not be skidded or rolled against materials already on the ground.

E. At Site of Work: In distributing the material at the site of the work, each piece shall be unloaded opposite or near the place where it is to be laid in the trench, or as otherwise directed by the Authority. Under no circumstances should lawns, grass plots or other private property be used for this purpose without the consent of the property owner.

PART 3 - CONSTRUCTION

3.1 GENERAL:

A. Manholes shall, in all cases, be fully and completely built and fitted with their frames and covers as the work progresses. Manholes shall be constructed in accordance with the following.

1. Excavation and Backfill: Excavation and backfill shall conform to the applicable requirements of Section 02201 and to the following:

   a. Excavations for manholes shall be made to a vertical plane 1 foot outside the walls of the manhole. Rigid type pavement if encountered shall be cut to a rectangular shape whose sides do not exceed more than 2 feet of the diameter of the manhole base.

   b. Spaces outside the manhole shall be backfilled with acceptable material in uniform layers not exceeding 4 inches in depth.

B. Precast Concrete Bases: All precast concrete bases shall be installed on a layer of crushed stone which shall have a minimum depth of 6 inches. The crushed stone shall conform to the quality and grading requirements specified in Section 703.3 of PennDOT Publication 408, Specifications for 1B, Type C crushed stone aggregate.

C. Where rubber gasket pipe seals used for connecting pipe sewer piping to precast concrete bases are of a type in which an annular space remains on the interior and exterior of the wall of the base after the pipe connection has been made, these annular spaces shall be completely filled with preformed plastic sealing compound. The sealing compound shall be tightly caulked into the annular spaces in such a manner as to completely fill the annular spaces and provide a completely watertight installation. The sealing compound shall be trowelled smooth at the inside face of the manhole base.

D. Concrete Channel Fill: The concrete channel fill shall be poured in the field for all manhole bases. Inverts shall be formed directly in the concrete channel fill of the manhole base, and shall be smooth (steel trowel finish) and accurately shaped to a semi-circular bottom conforming to the inside of the adjacent sewer sections. Changes in size and grade shall be made gradually. Changes in the direction of the sewer and entering branches shall have a true curve of as large a radius as the size of the manhole will permit. Steep slopes outside the invert channels shall be avoided.

E. Contractor may use a precast invert base. Contractor shall notify the Authority of their intent to use the precast invert base prior to submitting the required shop drawings.

F. Manhole Walls: All precast reinforced concrete riser and top sections necessary to build a completed manhole shall be furnished and the different sections shall fit together readily to permit effective jointing.

G. Rubber gasket joints between adjacent sections shall be carefully made in accordance with the written instructions of the manufacturer of the precast concrete manhole sections.

H. Preformed plastic sealing compound joints between adjacent sections shall be carefully made in accordance with written instructions of the manufacturer of the preformed plastic sealing compound. After the joints have been made, the preformed plastic sealing compound shall be trowelled smooth across the joint on the inside of the manhole wall.

I. Pipe connections to manhole walls shall be made in the same manner as specified hereinbefore for pipe connections to precast manhole bases.

J. Frames and Covers: Where required, final adjustment of frame to elevation shall be made by precast concrete manhole grade rings. All joints located between the bottom of the frame and the top manhole section shall have Manhole Joint Sealing Material such as Rub-R-Nek, or approved equal. The interior face of this area shall receive a 1/2-inch thick trowelled mortar finish. Frames for all manholes shall be bolted to the manhole as shown on the detail drawings. Bolts, nuts and washers shall be of steel and conform to ASTM A307. Bolts shall have sufficient number of proper-sized threads for installation thereof in the insert provided in the top manhole section. The bolts shall be of such length and be provided with a sufficient number of threads above the top of the frame to properly tighten the nuts thereon.

3.2 ACCEPTANCE TESTS:

A. General: Test each manhole constructed in the project by the method specified herein. If the manhole is constructed on an existing sewer where sewage flow must be maintained, the test will be waived. Conduct tests in presence of and to the complete satisfaction of the Engineer. Should a manhole not satisfactorily pass testing, discontinue manhole construction in the project until that manhole does test satisfactorily. Provide tools, materials (including water), equipment and instruments necessary to conduct the manhole testing specified herein.

B. Vacuum Test:

1. Vacuum Testing Equipment: Use vacuum apparatus equipped with necessary piping, control valves and gauges to control air removal rate from the manhole and to monitor vacuum. Provide an extra vacuum gauge of known accuracy to frequently check testing equipment and apparatus. Vacuum testing equipment and associated testing apparatus are subject to the Authority's approval. Provide seal plate with vacuum piping connections for inserting in manhole frame.

2. Prior to testing, clean manholes thoroughly and seal openings, both to the complete satisfaction of the Authority. Seal openings using properly sized plugs. Perform testing with frames installed. Include the joint between the manhole and manhole frame in the test. The Contractor may elect to make a test for his own purposes prior to backfilling. However, conduct tests of the manholes for acceptance only after backfilling has been completed.

3. Vacuum Test Procedure: Perform vacuum testing in accordance with the testing equipment manufacturer's written instruction. Draw a vacuum of 10 inches of mercury and close the valves. Consider manhole acceptance when vacuum does not drop below 9 inches of mercury for the following manhole sizes and times:

4-foot diameter-	60 seconds
5-foot diameter-	75 seconds
6-foot diameter-	90 seconds
7-foot diameter-	105 seconds

4. Repair and Retest: Determine source or sources of leaks in manholes failing acceptance limits. Repair or replace defective materials and workmanship, as is the case, and conduct additional manhole acceptance tests and such subsequent repairs and retesting as required until manholes meet test requirements. Materials and methods used to make manhole repairs shall meet with the Authority's approval prior to use.

5. Acceptance: Observations of successful testing of manholes by the Authority does not constitute acceptance of the system or any portion thereof.

6. Only upon final inspection by the Authority, and upon written acceptance for same, will the system or portion thereof be considered substantially completed. Upon such acceptance, the warranty period as specified for the manholes will commence.

END OF SECTION

G:\BEng-Data\Projects\13-103-01\Specification Revisions\02730.doc

SECTION 02731

SANITARY SEWER PIPE

SECTION 02731 - SANITARY SEWER PIPE

PART 1 - GENERAL

1.1 Related Sections:

Section 02201 - Trench Excavation and Backfill
Section 02730 - Manholes

1.2 DESCRIPTION OF WORK:

A. The work within this section includes, but is not limited to, the furnishing of all equipment, labor and materials and performing all operations necessary to construct all gravity sanitary sewers, including all main sewers and service connections of whatever size and type required, in accordance with the Authority Specifications.

1.3 QUALITY ASSURANCE:

A. Referenced standards shall be the following:

1. American National Standards Institute (ANSI)
2. American Society for Testing and Materials (ASTM)
3. American Water Works Association (AWWA)

1.4 SUBMITTALS:

A. Certificates: Contractor shall submit three (3) copies of each manufacturer's certification attesting that the materials meet or exceed specification requirements.

B. Shop Drawings: Submit manufacturer's descriptive and technical product data for gravity sanitary sewer pipe and fittings prior to start of work for approval in accordance with Section 01300.

PART 2 - MATERIALS

2.1 POLYVINYL CHLORIDE PIPE (PVC):

A. Pipe and Fittings: The pipe and fittings shall be made of virgin Type 1, Grade 1 PVC compounds as defined and described in ASTM D3034 (PSM) for Rigid Poly (Vinyl Chloride) Compounds and Chlorinated Poly (Vinyl Chloride) Compounds. Pipe wall thickness shall conform to SDR 35. Pipe and fittings shall be joined with an integral bell-and-spigot type rubber gasketed joint. Each integral bell joint shall consist of a formed bell with a single rubber gasket. Gaskets shall conform to ASTM F477.

2.2 DETECTION TAPE

A. Detection tape shall be a metal detectable reinforced underground utility marking tape with a 50 gauge (0.0005”) solid aluminum foil core with permanent printing under a mylar layer.

B. The detection tape shall consist of a minimum 9.0 mil (0.0009”) overall thickness, coated and colored cross woven polyethylene, with no less than 2,500 lbs. of tensile break strength per 12” width and color coded suitable for direct burial.

C. Detection tape shall be 2-inch width minimum.

2.3 EPOXY LINED DUCTILE IRON PIPE:

A. Ductile iron pipe shall be in full accordance with ANSI A21.51 or AWWA C151, latest editions, for the material class or pressure designated and ANSI A21.50 or AWWA C150, latest edition, for wall thickness. All ductile iron pipe shall be lined with Protecto 401 ceramic epoxy lining or equal. These linings shall be applied in accordance with the manufacturers recommendations

B. Minimum Thickness: The minimum thickness shall be Class 52. Pipe for railroad crossing shall be Class 56.

D. IRON FITTINGS: Iron fittings shall be ductile or gray iron and be in full accordance with the standard specification set forth in ANSI A21.10 or AWWA C110, latest editions. All fittings shall be minimum Class 150 and lined with Protecto 401 ceramic epoxy lining or equal. These linings shall be applied in accordance with the manufacturers recommendations

E. JOINTS: Joints shall be of the push-on type or mechanical joint type in full accordance with ANSI A21.11 or AWWA C111, latest editions, for all pipe except at changes in alignment or other conditions requiring pipe restraint or as noted on the drawings. Joints requiring pipe restraint shall be Lok-Type or TR Flex as manufactured by US Pipe; Super-Lock as manufactured by Clow; Lok-Fast as manufactured by American Pipe; Locked Mechanical Joint as manufactured by Atlantic State and Griffin; or approved equivalent. Adequate tie rods must be provided to develop full joint restraint and must extend to the adjacent fitting or joint as approved by the National Board of Fire Underwriters No. 24, "Standard for Outside Protection". Mechanical joint retainer glands shall not be used. Proposed joint restraint system shall be submitted for Authority's review and approval.

2.4 INSPECTION:

A. Field Inspection: All pipe shall be installed and tested for defects in material and/or workmanship in the manner specified and in the presence of and as approved by the Authority.

2.5 HANDLING OF MATERIAL:

A. Replacement of Damaged Material: Any material furnished by the Authority that becomes damaged after acceptance by the Contractor shall be replaced by the Contractor at his own expense.

B. Responsibility for Safe Storage: The Contractor shall be responsible for the safe storage of material furnished by or to him and accepted by him, and intended for the work, until it has been incorporated in the completed project. The interior of all pipe, fittings and other accessories shall be kept free from dirt and foreign matter at all times. All equipment and materials subject to damage from freezing shall be drained and stored in a manner which will protect them.

C. Hauling: All materials furnished by the Contractor shall be delivered and distributed at the site by the Contractor. Materials furnished by the Authority shall be picked up by the Contractor at points designated by the Authority and hauled to and distributed at the site.

D. Pipe, fittings, items of equipment, and other materials of construction shall be loaded and unloaded by lifting with hoists or skidding to avoid shock or damage. Under no circumstances shall such materials be dropped. Materials handled on skidways shall not be skidded or rolled against materials already on the ground.

E. At Site of Work: In distributing the material at the site or the work, each piece shall be unloaded opposite or near the place where it is to be laid in the trench, or as otherwise directed by the Authority. Under no circumstances should lawns, grass plots or other private property be used for this purpose without the consent of the property owner.

F. Handling of Pipe and Fittings: Proper implements, tools and facilities satisfactory to the Authority shall be provided and used by the Contractor for the safe and convenient prosecution of the work. All pipe, fittings, jointing materials, etc. shall be carefully lowered into the trench piece by piece by means of a derrick, ropes or other suitable tools or equipment in such a manner as to prevent damage to sewer line materials and/or workmen and in strict accordance with the manufacturer's recommendations. Under no circumstances shall such materials be dropped or dumped into the trench.

PART 3 - CONSTRUCTION

3.1 PIPE INSTALLATION:

A. General: All pipe shall be laid to a uniform line and grade between manholes, socket ends upgrade, with a firm and even bearing along the barrel of the pipe, close joints and smooth invert. The spigot end of the pipe is to be centered in, shoved tight, and secured against the bell or socket of the previously laid pipe.

B. The interior of each pipe shall be cleaned of all excess joint and foreign material before the next pipe is laid. The pipe shall be laid in the backfill materials as specified. Pipe laying shall commence at the lowest point and proceed upgrade. At the close of each day's work and at such other times when pipe is not being laid, the open end of the pipe shall be protected with a close fitting stopper.

C. Construction Control: If grade boards are to be used, the Contractor shall provide at least three grade boards in advance of pipe laying at all times at intervals not exceeding 50 feet and stretch a line parallel with the grade line. From this line, the trench and every pipe laid shall be tested as to grade and alignment. Base lines and controlling elevations established for the construction of the work shall be preserved and kept uncovered so they can be examined at any time.

D. The use of laser equipment shall be permitted. Grade boards as specified will not be required if a laser is used.

E. Contractor shall provide verification of grade as work progresses. Pipe not laid to proper line and grade will be removed and reconstructed at the Contractor's expense.

F. Variations: The Authority reserves the right to vary the line and/or grade from that shown on the drawings for pipe lines and manholes when such changes may be necessary and advantageous. No claims for extra work will be allowed for changes in location or grade except as when such changes are made after trenching has been done.

G. Pipe Clearance in Rocks: Ledge rock, boulders and large stones shall be removed to provide a clearance of at least 6 inches below and on each side of all pipe and fittings for pipes 24 inches or less in diameter, and 9 inches for pipes larger than 24 inches in diameter.

H. The specified minimum clearances are the minimum clear distances which will be permitted between any part of the pipe and/or fitting being laid and any part, projection or point of such rock, stone or boulder.

I. Pipes at Manholes or Other Rigid Structures: Pipe directly connected to or supported by rigid structures shall be as indicated on the drawings.

J. Diversion of Sewage during Construction

1. Sewage flowing in existing sewer shall be temporarily plugged or diverted around or through the construction by means of by-pass pumping, fluming, or any other means acceptable to the Authority.

2. At completion of each workday tie sewage back into existing sewer. Tie-in shall be covered so there is no visible sewage.

3. Prior to beginning work, Contractor shall have on hand all required materials necessary to accomplish the work.

4. Contractor shall be responsible for any property damage caused by sewage handling.

3.2 CONCRETE CRADLE AND ENCASEMENT:

A. Preparation: Prior to the formation of the cradle or encasement, temporary supports consisting of timber wedges and solid concrete bricks or cap blocks shall be used to support the pipe in place. Temporary supports shall have minimum dimensions and shall support the pipe at not more than two locations, one at the bottom of the barrel of the pipe adjacent to the shoulder of the socket and the other near the spigot end.

B. Placing: After jointing of the pipe has been completed, concrete shall be uniformly poured beneath and on both sides of the pipe as shown on the details. Placement shall be wet enough during placement to permit its flow, without excessive prodding, to all required points around the pipe surface. The width of cradle shall be such as to fill completely the trench width. In case of extremely wide trenches, concrete easement may be confined above the top of the pipe to a narrower width but in no case shall it to less than the width of trench required for the size of pipe being used.

C. Before depositing concrete, the space within the limits of the pour shall have been cleared of all debris and water. Water shall not be allowed to rise adjacent to, or flow over, concrete deposited for less than 24 hours. Concrete shall be protected from the direct rays of the sun and kept moist, by a method acceptable to the Authority, for a period of seven days or until backfilling is begun. In no case shall backfilling begin within 24 hours of the time of placing and the Engineer shall have strict control of the rate of backfilling.

3.3 DROP CONNECTIONS:

A. The Contractor shall build drop connections where shown on the drawings, where drop in the invert is 2 feet or more, or as required by the Authority, and in conformity with the detail drawings and as specified herein. Drop connections shall be of the same pipe material used to construct the main from which the drop connection is made.

3.4 SERVICE CONNECTIONS:

A. Multiple service to more than one property for a building sewer is not permitted. A single sewer connection to the Authority's system for each property is required.

B. Fittings (wye branches, risers and bends) and service pipe shall be installed in strict accordance with these specifications and any and all practices and precautions required for the street sewers are equally applicable to the building connections from the sewer to the right-of-way line, or to a location designated by the Authority. The Contractor shall place a 2" x 4" wooden marker at the end of each sewer lateral. The marker shall be one piece and may not be constructed from two or more smaller pieces. The marker shall extend from the lateral invert to 12 inches above grade.

C. Deep Sewer: In general, where the sewer is laid in trench and the depth of the invert is more than 12 feet, or elsewhere as required, service connections will enter the sewer as shown on the detail drawings for "Service Connection - Deep Sewer".

D. Plugs: The upper free ends of service connection lines and wye or tee branches and pipe outlets (when connections are not made thereto at the time the mains are laid) shall be provided with a carefully fitted plug. The type of plug used and the manner in which it is secured and braced shall be acceptable to the Authority. After installation, all plugs shall be capable of being secure and completely airtight when subjected to the test procedures specified hereinafter.

3.5 END OF PIPE TO BE PROTECTED:

A. In all cases the mouth of the pipe shall be provided with a circular board or stopper, carefully fitted to the pipe, to prevent earth or other substances from washing into the pipe.

B. In rock excavation, the mouth of the pipe shall be carefully protected from all blasts, and the excavation shall be fully completed at least 25 feet in advance of laying of the pipe.

3.6 STORM SEWER OBSTRUCTION:

A. When it is necessary to construct a pipe sewer beneath an existing storm sewer in a location where the vertical separation between the top of the pipe sewer piping and the bottom of the storm sewer piping is 18-inches or less, the sewer piping shall be encased in concrete, which encasement shall extend for a distance of not less than 5 feet on each side of the outside surface of the storm sewer piping.

3.7 TESTS:

A. General: Contractor shall notify the Authority at least 72 hours in advance of testing for scheduling. Conduct tests in presence of and to the complete satisfaction of the Authority. Test shall include alignment, deflection, infiltration, air and TV inspection.

B. The Contractor shall submit to the Authority for approval the detailed test procedure and list of test equipment he proposes to use prior to testing.

C. Cleaning Prior to Tests: Before tests are conducted, clean interior of piping including sewers, branches, and service connections until free of dirt or silt or construction debris.

D. Alignment: After the mains have been laid and backfilled, a light will be flashed between manholes or manhole locations to determine whether the alignment of the sewer is true and whether any pipe has been displaced, broken or otherwise damaged subsequent to laying. This test will again be conducted before final acceptance of the sewer. Each section (manhole to manhole) of sewer shall show a good light circle throughout its length and any and all defects shall be corrected by the Contractor, to the satisfaction of the Authority, before the work shall proceed and before acceptance of the lines.

E. Deflection Test: Provide GO-NO-GO Mandrel and incidental equipment for Deflection Test. Mandrel to conform to following requirements:

1. Cylindrical in shape with odd number of arms not less than nine, spaced evenly around the mandrel.

2. Minimum 12 inches contact length of mandrel arms with pipe well.

3. Mandrel diameter ninety-five percent (95%) of inside pipe diameter.

4. Conduct deflection testing no less than fifteen (15) days after section of pipe sewer main and service connection between adjacent manholes is backfilled.

5. Pull mandrel through pipe section manually; powered pulling devices not permitted.

6. Consider sewer line section which mandrel cannot pass through, to have more than maximum allowable deflection of five percent (5%).

F. Air Testing: The Contractor shall test each section of sewer between manholes and all laterals to the limit of this contract using low pressure air. Testing shall not be performed until all backfilling has been completed. The Contractor may, at his option, test the section of sewer for his own purposes, prior to completion of backfilling; however, the requirements of this subsection shall not be deemed to be completed until the lines have been tested after

the backfilling has been completed and trench settlement has been minimized. The costs of any testing incurred prior to authorization from the Authority after backfilling has been completed shall be borne by the Contractor.

1. A minimum period of two minutes shall be provided to allow equilibrium of the air temperature with pipe wall before test readings shall commence. The rate of air loss shall be determined by measuring the time interval required for the average internal pressure to decrease by 1.0 psig.

2. The initial test pressure to be developed in the sewer and laterals shall be determined as follows:

3. Internal pressure in psig shall be calculated as the sum of 3.5, plus the maximum height in feet between the invert of the sewer and the existing ground surface in the section of sewer to be tested divided by 2.3. (For example, if the maximum height is determined to be 9.2 feet, the added pressure would be 4.0 psig. The initial test pressure in the sewer would then be 7.5 psig. The allowable drop would be to 6.5 psig within the time indicated elsewhere in this subsection.) In no case shall the test pressure in the sewers or laterals be greater than 10 psig or the maximum internal differential joint pressure recommended by the manufacturer of the pipe, whichever is less.

4. The pipe shall be considered acceptable if the air loss rate does not exceed 0.0030 cubic feet per minute per square foot of internal pipe surface when tested at the initial pressure previously defined in this subsection. The time for the air pressure to decrease 1.0 psig shall not be less than the time indicated in the following table:

Pipe Diameter	Minutes	Seconds
6" - 12"	6	0
15" - 18"	8	0

5. If the above rates of leakage are exceeded, the Contractor shall, at his expense, determine the source of leakage and make all necessary corrections and retest.

G. Infiltration: After the air testing described in the preceding subsection has been completed by the Contractor, regardless of any indications of the test results made by the Authority, the Authority reserves the right to perform field investigations, prior to final written acceptance period specified elsewhere in these specifications, to establish the leakage of groundwater into the sewer and laterals constructed under this contract. The cost of these investigations shall be borne by the Developer/Contractor.

1. Should the leakage exceed 100 gallons per day per inch diameter per mile of pipe for any section, the Contractor shall, at the direction of the Authority, and at no cost to the Authority, perform any additional testing or corrective work required to reduce the infiltration in each manhole run from those lines installed by the Contractor to less than 100 gallons per day per inch diameter of pipe. This leakage applies to each manhole run separately and should not be construed to mean total leakage in the total system. The scope of this corrective work shall include, but not be limited to, cleaning, televising and testing the sewer and laterals to the limits installed by the Contractor, to include testing and grouting of joints, excavation and replacement of faulty or damaged portions of the work, and all final restoration.

H. TV Inspection

1. Prior to final acceptance, the Contractor will be responsible for having the newly installed main completely televised, including flow control. This work shall be performed by a company specializing in such services using a color camera specifically designed for this application. The Contractor shall televise one manhole section at a time.

2. The Contractor shall provide two (2) copies of the video to the Authority and the Authority Engineer.

3. Each sewer section shall also be video recorded using high quality color DVD digital video disks with audio. In the event that a sewer section must be excavated and repaired during televising work, the Authority may request that video recordings be taken both before and after repairs, and shall be included as part of the records.

I. Acceptance: Observation of successful testing of sewers by the Authority does not constitute acceptance of the system or any portion thereof.

J. Only upon final inspection by the Authority, and upon written acceptance for same will the system or portion thereof be considered substantially completed. Upon such acceptance, the warranty period as specified for the sewers will commence.

K. The final inspection will include, but not be limited to, visual inspections, lamping of lines and random air testing of lines. If, during the final inspection, any irregularities are observed, the condition must be corrected at the Contractor's expense prior to acceptance.

L. Fifteen months from substantial completion, the Contractor shall televise the entire sewer system and supply the video to the Authority for review. Defects detected by this inspection shall be repaired by the Contractor at no cost to the Authority. Defects shall include but are not limited to line sags, pipe cracks, detected leaks, etc.

END OF SECTION

G:\BEng-Data\Projects\13-103-01\Specification Revisions\02731.doc

SECTION 02732

FORCE MAINS

SECTION 02732 - FORCE MAINS

PART 1 - GENERAL

1.1 Related Sections:

Section 02201 - Trench Excavation and Backfill
Section 02730 - Manholes

1.2 DESCRIPTION OF WORK:

A. The work within this section includes, but is not limited to, furnishing all labor, equipment and material and performing all operations in connection with the installation of force mains and appurtenances and furnishing all tests required, complete in accordance with the Authority Specifications.

1.3 QUALITY ASSURANCE:

A. Referenced standards shall be the following:

1. American Association of State Highway and Transportation Officials (AASHTO)
2. American National Standards Institute (ANSI)
3. American Society for Testing and Materials (ASTM)
4. American Water Works Association (AWWA)

1.4 SUBMITTALS:

A. Certificates: Contractor shall submit three (3) copies of each manufacturer's certification attesting that the materials meet or exceed specification requirements.

B. Shop Drawings: Manufacturer's descriptive and technical product data for pressure pipe and fittings shall be submitted prior to the start of work for approval in accordance with Section 01300.

PART 2 - MATERIALS

2.1 DUCTILE IRON PIPE:

A. Ductile iron pipe shall be in full accordance with ANSI A21.51 or AWWA C151, latest editions, for the material class or pressure designated and ANSI A21.50 or AWWA C150, latest editions, for wall thickness.

B. Minimum thickness shall be Class 52. Pipe for railroad crossing shall be Class 56.

C. Iron fittings shall be ductile or gray iron and be in full accordance with the standard specification set forth in ANSI A21.10 or AWWA C110, latest edition. All fittings shall be minimum Class 250 with lining and joints as required for pipe constraint.

D. Joints shall be of the push-on type or mechanical joint type in full accordance with ANSI A21.11 or AWWA C111, latest edition, for all pipe except at changes in alignment, values or other conditions requiring pipe constraint or as noted on the drawings. Joints requiring pipe constraint shall be Lok-Type or TR Flex as manufactured by U.S. Pipe; Super-Lock as manufactured by Clow; Lok-Fast as manufactured by American Pipe; Locked Mechanical Joint as manufactured by Atlantic State and Griffin; or approved equivalent. Adequate tie rods must be provided to develop full joint restraint and must extend to the adjacent fitting or joint as approved by the National Board of Fire Underwriters No. 24, "Standard for Outside Protection."

E. Ductile iron pipe shall be used for all force mains greater than 4-inches in diameter, unless otherwise approved by the Authority.

F. Epoxy Lining: The lining material shall be an amine cured novalac epoxy containing at least 20% by volume of ceramic quartz pigment. The lining material shall be Protecto 401 Ceramic Epoxy, or approved equal. Submittals for the lining material shall include a history of lining pipe and fittings for sewer service, a test report verifying the following properties, and a certification of the test results.

1. A permeability rating of 0.00 when tested according to Method A of ASTM E-6-66, Procedure A with a test duration of 30 days.

2. The following test must be run on coupons from factory lined ductile iron pipe:

a. ASTM B-117 Salt Spray (scribed panel)-Results to equal 0.0 undercutting after two years.

b. ASTM G-95 Cathodic Disbondment 1.5 volts @ 770 F. Results to equal no more than 0.5 mm undercutting after 30 days.

c. Immersion Testing rated using ASTM D-714-87.

1) 20% Sulfuric Acid - No effect after two years.

2) 25% Sodium Hydroxide - No effect after two years.

3) 1600F Distilled Water-No effect after two years.

4) 1200F Tap Water (scribed panel) - 0.0 undercutting after two years with no effect.

d. An abrasion resistance of no more than 4 mils (.10mm) loss after one million cycles-European Standard EN 598: 1994 section 7.8 Abrasion resistance.

3. The lining shall be applied by a competent firm with a successful history of applying linings to the interior of ductile iron pipe and fittings. Prior to abrasive blasting, the entire area to receive the protective compound shall be inspected for oil, grease, etc. Any area where oil, grease, or any substance which can be removed by solvent is present shall be solvent cleaned using the guidelines outlined in DIPRA-1 Solvent Cleaning. After the surface has been made free of grease, oil or other substances, all areas to receive the protective compounds shall be abrasive blasted using compressed air nozzles with sand or grit abrasive media. The entire surface to be lined shall be struck with the blast media so that all rust, loose oxides, etc., are removed from the surface. Only slight stains and tightly adhering annealing oxide may be left on the surface. Any area where rust reappears before lining must be reblasted.

4. After the surface preparation and within 8 hours of surface preparation, the interior of the pipe shall receive 40 mils nominal dry film thickness of lining material. No lining shall take place when the substrate or ambient temperature is below 40 degrees Fahrenheit. The surface also must be dry and dust free. If flange pipe or fittings are included in the project the lining shall not be used on the face of the flange.

5. The gasket area and spigot end up to 6 inches back from the end of the spigot end must be coated with 6 mils nominal, 10 mils maximum of joint compound supplied by the lining manufacturer. The joint compound shall be applied by brush to ensure coverage. Care should be taken that the joint compound is smooth without excess buildup in the gasket seat or on the spigot ends. Coating of the gasket seat and spigot ends shall be done after the application of the lining. The number of coats of lining material applied shall be as recommended by the lining manufacturer. However, in no case shall this material be applied above the dry thickness per coat recommended by the lining manufacturer in printed literature. The maximum or minimum time between coats shall be that time recommended by the lining material manufacturer. No material shall be used for lining which is not indefinitely recoatable with itself without roughening of the surface. Touch-up and repair shall be done in accordance with the lining manufacturer’s recommendations.

6. All ductile iron pipe and fitting linings shall be checked for thickness using a magnetic film thickness gauge. The thickness testing shall be done using the method outlined in SSPC-PA-2 Film Thickness Rating. The interior lining of all pipe barrels and fittings shall be tested for pinholes with a non-destructive 2,500 volt test. Any defects found shall be repaired prior to shipment.

7. The pipe or fitting manufacturer must supply a certificate attesting to the fact that the applicator met the requirements of this specification, and that the material used was as specified.

8. Epoxy lined pipe and fittings must be handled only from the outside of the pipe and fittings. No forks, chains, straps, hooks, etc. shall be placed inside the pipe and fittings for lifting, positioning or laying.

2.2 POLYVINYL CHLORIDE PIPE (PVC):

A. PVC pipe shall be in strict accordance with ASTM D2241, Standard Specification for Polyvinyl Chloride (PVC) Plastic Pipe, (SDR-PR).

B. Pipe shall be Certain-Teed, Fluid-Tite, Integral Bell, PVC Pressure Pipe, SDR 21 or approved substitution.

C. PVC pipe may be used for force mains 2-inches or smaller in diameter, unless otherwise approved by the Authority.

D. For PVC pipe, compatible PVC fittings as recommended by the pipe manufacturer, shall be used. All PVC fittings shall be of the same class as the piping.

E. Joints shall be of the push-on type in strict accordance with ASTM D3139.

2.3 POLYETHYLENE PIPE (PE/HDPE):

A. Polyethylene pipe shall conform to AWWA C901, Standard for Polyethylene (PE) Pressure Pipe and Tubing, ½ In. through 3 In. for Water Service. All pipe shall be manufactured with a material specified in ASTM D 3350 by a cell classification of 345434C with an AWWA C901 standard PE Code of 3408. The pipe shall have a pressure class of PC 200 with an outside diameter based dimension ration (DR) of 9 at 73.4 ^{o}F. The manufacturer shall furnish a certified affidavit attesting that all products delivered comply with the requirements of AWWA C901. All pipe shall be marked with the manufacturer's name or trademark, size, material code, pressure class, and AWWA designation number. Pipe shall be supplied in standard lengths as much as possible.

B. Tracer wire shall be a #12 AWG high strength copper clad steel conductor (HS-CCS), insulated with a 30 mil, high density, high molecular weight polyethylene (HDPE) insulation, and rated for direct burial use at 30 volts. HS-CCS conductor must be a 21% conductivity for locating purposes, break load 380# minimum. HDPE insulation shall be RoHS compliant and utilize virgin grade material. Insulation color shall meet the APWA color code standards for identification of buried utilities. Tracer wire shall be Copperhead HS-CCS HDPE 30 mil insulation or approved equal. Direct bury corrosion proof wire

connectors shall be installed as necessary during the installation and connection of the tracer wire. Copperhead Snakebite wire connectors or approved equal shall be installed to terminate and connect all tracer wire.

C. PE fittings shall meet the requirements of AWWA C901 and be of the same (or higher) pressure rating as the pipe line. The manufacturer must certify that the fittings are capable of restraining PE pipe or tubing from pullout at the design pressure.

D. Pipe joints shall be of the compression type utilizing a totally confined grip seal and coupling nut. Stainless steel tube stiffener insert shall be used that does not extend beyond the clamp or coupling nut.

Alternatively and at the discretion of the Authority, PE pipe jointed by thermal butt-fusion, in accordance with ASTM D-2657 and the pipe manufacturer's recommendations, may be allowed. For consideration of this pipe jointing method, documentation must be provided to show that the proposed pipe installer is properly certified/pre-qualified by the pipe manufacturer. PE pipe segments adjacent to butt-fusion joints must be rigidly supported for a distance of one foot beyond the joint. Termination to pump basins, valves and fittings shall be flange assemblies.

2.4 VALVES/CLEANOUTS:

A. Cast iron ball or plug valves shall be installed on 3-inch and larger low pressure and force main lines at the locations indicated on the drawings. Valves installed in valve/cleanout pits shall be actuated with a quarter turn type hand lever. Buried valves shall be actuated with an underground actuator through a cast iron valve box.

B. Cast iron valves shall be Dresser, Series 800, X-Centric, or approved substitution.

C. Cleanouts shall be constructed of PVC, SDR 21 material as indicated on the detail drawings. Ball valves shall be installed at the locations indicated on the detail drawings.

2.5 VALVE BOXES:

A. Cast iron valve boxes shall be installed over all buried valves in accordance with AWWA C500-80.

2.6 COMBINATION AIR RELEASE/VACUUM BREAK VALVES:

A. Combination air release/vacuum break valves shall be installed where called for on the plans. Work shall include the complete assembly with tapping saddle, shut-off valve, air release and vacuum valve, piping and fittings, all complete and ready for operation. The valve shall function automatically to release to the atmosphere both large and small amounts of air that

accumulate in the pipeline. The valve shall also function to admit air into the pipeline under emergency conditions or when it is being drained. The valve shall be of a type having a stainless steel float enclosed in the valve body with a lever for opening and closing the valve. The assembly shall not leak nor the valve stick under service conditions. All components of the valve assembly shall be stainless steel material. The valves shall be as manufactured by A.R.I. Valves, Inc., or approved equivalent.

B. The Contractor shall furnish the valve with shut-off valve, blow-off valves, quick disconnect couplings and a minimum of 5 feet of hose to permit back flushing after installation without dismantling the valve.

2.7 PRECAST REINFORCED CONCRETE AIR RELEASE VALVE MANHOLES:

A. Precast Reinforced Concrete Manhole: Manhole shall be as specified in Section 02730.

B. Frame and Cover: Frame and cover shall be as specified in Section 02730.

C. Manhole Steps: Steps shall be as specified in Section 02730.

D. Precast Concrete Manhole Grade Rings: Grade rings shall be as specified in Section 02730.

2.8 INSPECTION:

A. Field Inspection: All pipe and appurtenances shall be furnished, installed and tested for defects in material and/or workmanship in the manner specified and in the presence of and as approved by the Authority.

2.9 HANDLING OF MATERIAL:

A. Replacement of Damaged Material: The Contractor shall replace, at his own expense, all material furnished by him and found defective in manufacture or damaged in handling after delivery by the manufacturer. This shall include the furnishing of all materials and labor required for replacement of installed material. Any material furnished by the Authority that becomes damaged after acceptance by the Contractor shall be replaced by the Contractor at his own expense.

B. Responsibility for Safe Storage: The Contractor shall be responsible for the safe storage of material furnished by or to him and accepted by him, and intended for the work, until it has been incorporated in the completed project. The interior of all pipe, fittings and other accessories shall be replaced by the Contractor at his own expense.

C. Hauling: All materials furnished by the Contractor shall be delivered and distributed at the site by the Contractor. Materials furnished by the Authority shall be picked up by the Contractor at points designated and hauled to and distributed at the site.

D. Pipe, fittings, items of equipment and other materials of construction shall be loaded and unloaded by lifting with hoists or skidding to avoid shock or damage and in strict conformance with the manufacturer's recommendations. Under no circumstances shall such materials be dropped. Materials handled on skidways shall not be skidded or rolled against materials already on the ground.

E. At Site of Work: In distributing the material at the site of the work, each piece shall be unloaded opposite or near the place where it is to be laid in the trench, or as otherwise directed by the Authority. Under no circumstances should lawns, grass plots or other private property be used for this purpose without the consent of the property owner.

F. Care of Pipe Lining: Pipe shall be handled so the lining will not be damaged. If, however, any part of the lining is damaged, the repair shall be made by the Contractor at his expense in a manner satisfactory to the Authority.

G. Handling of Force Main Materials into Trench: Proper implements, tools and facilities satisfactory to the Authority shall be provided and used by the Contractor for the safe and convenient prosecution of the work. All pipe, fittings, valves, etc. shall be carefully lowered into the trench piece by piece by means of a derrick, ropes or other suitable tools or equipment, in such a manner as to prevent damage to sewer line materials, protective coatings and linings. Under no circumstances shall such materials be dropped or dumped into the trench.

PART 3 - CONSTRUCTION

3.1 PIPE INSTALLATION:

A. General: All pipe shall be laid and maintained to the required lines and grades with fittings and valves at the required locations; spigots centered in bells; and all valves plumb. The pipe shall be laid in the backfill materials as specified. Pipe laying shall commence at the lowest point and proceed upgrade.

B. Construction Control: During the installation of a force main, the pipe shall be laid at a constantly increasing grade to each high point, air release manhole or point of discharge, as shown on the contract drawings. The Contractor shall provide sufficient construction control to assure that there are no sags or loss in grade in the force main which could tend to accumulate air other than at the high points shown on the drawings. Failure to comply with this requirement shall necessitate the Contractor to take remedial steps to correct this situation. All such costs shall be borne by the Contractor.

C. Variations: The Authority reserves the right to vary the line and/or grade from that shown on the drawings for the pipe lines and manholes and to vary the location of fittings and valves when such changes may be necessary or advantageous.

D. Hammer Test: The pipe and fittings shall be inspected for defects and while suspended above grade, be rung with a light hammer to detect cracks.

E. Cleaning Pipe and Fittings: All lumps, blisters and excess coal tar coating shall be removed from the bell and spigot end of each pipe, and the outside of the spigot and the inside of the bell shall be wire-brushed and wiped clean and dry and free from oil and grease before the pipe is laid.

F. Depth of Pipe: All pipe shall be laid to the depth shown on the contract drawings or a minimum of 4.0 feet from grade to the crown of pipe.

G. Laying Pipe: Every precaution shall be taken to prevent foreign material from entering the pipe while the pipe is being placed in the trench. During laying operations, no debris, tools, clothing or other material shall be placed in the pipe.

H. Precautions shall be taken to prevent dirt from entering the joint space.

I. At times when pipe laying is not in progress, the open ends of pipe shall be closed by a watertight plug or other means approved by the Engineer. This provision shall apply during the noon hour as well as overnight. If water is in the trench, the seal shall remain in place until the trench is pumped completely dry.

J. Cutting Pipe: The cutting of pipe for inserting valves, fittings or closure pieces shall be done in a neat and workmanlike manner, without damage to the pipe to leave a smooth end at right angles to the axis of the pipe.

K. Permissible Deflection of Joints: If deflection is required, make after joint is assembled. The amount of deflection shall not exceed 50% of the maximum limits as specified in the AWWA C600, latest edition.

L. Unsuitable Conditions for Laying Pipe: No pipe shall be laid in water or when, in the opinion of the Authority, trench conditions are unsuitable.

M. Horizontal Directional Drilling: Installing PE/HDPE Pipe utilizing horizontal directional drilling may be used if approved by the Authority. Provide a swivel to reaming assembly and pull section of pipe to minimize torsion stress on pull section after drilling pilot hole. Hold reaming diameter to 1.5 times outside diameter of pipe being installed. Protect pull section as it proceeds during pull back so it moves freely and is not damaged. Pull detection wire along with pipe. When connecting to adjacent pulled or non-pulled

section of pipe, allow pull section of pipe to extend past termination point. Replace portions of pipeline not in compliance with Authority's specifications at no additional cost to the Authority. Install detection wire without splices. Locate wires on top and along pipe. Allow adequate slack and support to protect wires from damage during backfilling operations. Test each detection wire for continuity after backfill is completed. If test for continuity is negative, repair or replace at Authority's direction.

3.2 JOINTS:

A. Mechanical Joint: The spigot end of the pipe shall be centrally located in the bell so that the rubber gasket is evenly sealed. All loose rust or foreign matter shall be removed from the inside surfaces of the bell and outside surface of the spigot prior to assembly. Bolts shall be tightened uniformly with a racket wrench so as to effect the joint seal. The normal range of bolt torques to be applied are:

Bolt Size (Inches)	Torque - Ft. Lbs.
5/8	45 - 60
3/4	75 - 90
1	100 - 120
1-1/4	120 - 150

If effective sealing is not attained at the maximum torque indicated above, the joint shall be disassembled and reassembled after thorough cleaning.

B. Push-On Type Joints: The joint shall be assembled as recommended by the manufacturer so as to effect the joint seal.

3.3 SETTING FITTINGS AND VALVES:

A. General: Valves and fittings shall be set and jointed to pipes in the manner hereinbefore specified for cleaning, laying and jointing pipe.

B. Valve Pits: A concrete valve pit shall be provided for every air release and vacuum valve meeting the requirements for a manhole as hereinafter specified. The pits shall be constructed to permit valve repairs and afford protection to the valve and pipe from impact where they pass through the pit walls.

3.4 ANCHORAGE:

A. Anchorage for Bends: All bends deflecting 11.25 degrees or more on mains 4-inches in diameter or larger shall be provided with restrained joints to prevent movement. Suitable metal rods shall be used only as shown on the plans or directed by the Engineer. All dead end valves shall be rodded to main line with 3/4-inch tie rods if a restrained joint is not utilized. Mechanical joint retainer glands shall not be used.

B. Reaction Backing: Reaction backing shall be concrete of a mix not leaner than 1 cement, 2-1/2 sand, 5 stone, and having a compressive strength of not less than 2,000 psi, at 28 days. Backing shall be placed between solid ground and the fitting to be anchored; the area of bearing on the pipe and on the ground in each instance shall be as shown on the plans or directed by the Authority. The backing shall, unless otherwise shown or directed, be so placed that the pipe and fitting joints will be accessible for repair.

C. Metal Harness: Metal harness of tie rods of adequate strength to prevent movement shall be used. Steel rods or clamps shall be galvanized and painted with two coats of asphalt type paint.

3.5 CONCRETE CRADLE AND ENCASEMENT:

A. Preparation: Prior to the formation of the cradle or encasement, temporary supports consisting of solid concrete bricks or cap blocks shall have minimum dimensions and shall support the pipe at not more than two locations, one at the bottom of the barrel of the pipe adjacent to the shoulder of the socket and the other near the spigot end.

B. Placing: After jointing of the pipe has been completed, concrete shall be uniformly poured beneath and on both sides of the pipe. Placement shall be done by the use of suitable equipment. The concrete shall be wet enough during placement to permit its flow, without excess prodding, to all required points around the pipe surface. The width of cradle shall be such as to completely fill the trench width. In case of extremely wide trenches, concrete encasement may be confined above the top of the pipe to a narrower width, but in no case shall it be less than the width of trench required for the size of pipe being used.

C. Before depositing concrete, the space within the limits of the pour shall have been cleared of all debris and water. Water shall not be allowed to rise adjacent to, or flow over, concrete deposited for less than 24 hours. Concrete shall be protected from the direct rays of the sun and kept moist, by a method acceptable to the Authority, until backfilling is begun. In no case shall backfill begin within 24 hours of the time of placing and the Authority shall have strict control of the rate of backfilling.

3.6 HYDROSTATIC TESTS:

A. Pressure Test: After the pipe has been laid and backfilled as specified, all newly laid pipe or any valves section thereof shall be subjected to a hydrostatic pressure of 150 pounds per square inch or 50% in excess of the normal working pressure, whichever is greater.

B. Where any section of a main is provided with concrete reaction backing, the hydrostatic pressure test shall not be made until at least five days have elapsed after the concrete reaction backing was installed. If high early strength cement is used in the concrete reaction backing, the hydrostatic pressure test shall not be made until at least two days have elapsed.

C. Duration of test shall be at least two hours.

D. Procedures: Each section of pipe shall be slowly filled with water and the specified test pressure, based on the elevation of the lowest point of the line or section, under test and corrected to the elevation of the test gauge, shall be applied by means of a pump connected to the pipe in a manner satisfactory to the Authority. The pump, pipe connections and all necessary apparatus including gauges, shall be furnished by the Contractor. The Contractor will make all taps into the pipe and furnish all necessary assistance for conducting the tests.

E. Expelling Air Before Test: Before applying the specified test pressure, all air shall be expelled from the pipe. If permanent air vents are not located at all high points, the Contractor shall make the necessary taps at such points before the test is made. After the test has been completed, the Contractor shall insert plugs at the tapping points.

F. Examination Under Pressure: Any cracks or defective pipes, fittings or valves discovered in consequence of this pressure test, shall be removed and replaced by the Contractor with sound material, and the test shall be repeated until satisfactory to the Authority.

G. Leakage Test: A leakage test shall be conducted concurrently with the pressure test. The Contractor will furnish laboratory calibrated test gauge and measuring device, and all necessary assistance to conduct the test.

H. Leakage Definition: Leakage is defined as the quantity of water that must be supplied into the newly laid pipe, or any valve section thereof, to maintain the specified leakage test pressure after the pipe has been filled with water and the air expelled.

I. Permitted Leakage: No pipe installed will be accepted until the leakage is less than the number of gallons per hour as determined by the formula:

$$L = \frac{ND\,(P)^{1/2}}{7400}$$

in which "L" equals the allowable leakage in gallons per hour; "N" is the number of joints in the length of pipelines tested; "D" is the normal diameter of the pipe, in inches; and "P" is the average test pressure during the leakage test, in pounds per square inch gauge. (The allowable leakage according to the formula is equivalent to 11.65 US gallons per 24 hours per mile of pipe per inch nominal diameter, for pipe in 18 foot lengths evaluated on a pressure basis of 150 psi.)

J. Should any test of pipe laid disclose leakage greater than that specified above, the Contractor shall at his own expense, locate, repair and replace the defective joints, pipe or fittings until the leakage is within the specified allowance.

3.7 COMMON REQUIREMENTS:

A. Authority Presence: The Authority shall monitor the pressure and leakage tests. The Contractor shall notify the Authority of the test day at least 72 hours in advance.

B. If test fails to meet test requirements, the Contractor shall pay for all additional engineering personnel testing time.

C. Weather: No testing will be authorized unless air temperature is 35 degrees F or higher.

D. Field Joints: All field joints of fittings and valves shall be exposed and examined during pressure and leakage test.

E. Acceptance: Observation of successful testing of force mains or manholes by the Authority does not constitute acceptance of the system or any portion thereof.

F. Only upon final inspection by the Authority and upon written acceptance for same will the system or portion thereof be considered substantially completed. Upon such acceptance, the warranty period as specified for the force main or manholes will commence.

G. If, during this final inspection, any irregularities are observed, the condition must be corrected at the Contractor's expense prior to acceptance.

END OF SECTION

G:\BEng-Data\Projects\13-103-01\Specification Revisions\02732.doc

SECTION 02733

LOW PRESSURE SANITARY SEWER

SECTION 02733 - LOW PRESSURE SANITARY SEWER

PART 1 - GENERAL

1.1 Related Sections:

Section 02201 - Trench Excavation and Backfill
Section 02730 - Manholes

1.2 DESCRIPTION OF WORK:

A. The work within this section includes, but is not limited to, the furnishing of all equipment, labor and materials and performing all operations necessary to construct all low pressure sanitary sewers, including all main sewers and service connections in accordance with the Authority Specifications.

1.3 QUALITY ASSURANCE:

A. Referenced standards shall be the following:

1. American Association of State Highway and Transportation Officials (AASHTO)
2. American National Standard Institute (ANSI)
3. American Society for Testing Materials (ASTM)
4. American Water Works Association (AWWA)

1.4 SUBMITTALS:

A. Certificates: Contractor shall submit three (3) copies of each manufacturer's certification attesting that the materials meet or exceed specification requirements.

B. Shop Drawings: Submit manufacturer's descriptive and technical product data for pressure pipe, fittings, etc. prior to the start of work for approval in accordance with Section 01300.

PART 2 - MATERIALS

2.1 POLYVINYL CHLORIDE PIPE (PVC):

A. Four (4) to Twelve (12) Inches: PVC pipe shall be in strict accordance with AWWA C900 for working pressure of 200 psi. Pipe shall be Certain-Tweed “Vinyl Iron Pipe”, DR 14, or approved equivalent.

B. Under Four (4) Inches: PVC pipe shall be in strict accordance with AASTM D2241, "Standard Specification for Polyvinyl Chloride (PVC) Plastic Pipe, (SDR-PR). "Pipe shall

be Certain-Teed "Fluid-Tite" Integral Bell, PVC Pressure Pipe, SDR 21 or approved equivalent.

C. For PVC pipe less than 4 inches, compatible PVC fittings as recommended by the pipe manufacturer, shall be used. All PVC fittings shall be of the same class as the piping.

D. Fittings for 4-inch or larger diameter PVC pipe shall be ductile or gray iron.

E. Joints shall be of the push-on type in strict accordance with ASTM D3139 "Standard Specification for Joints for Plastic Pressure Pipe Using Flexible Elastomeric Seals".

2.2 POLYETHYLENE PIPE (PE/HDPE):

A. Polyethylene pipe shall conform to AWWA C901, Standard for Polyethylene (PE) Pressure Pipe and Tubing, ½ In. through 3 In. for Water Service. All pipe shall be manufactured with a material specified in ASTM D 3350 by a cell classification of 345434C with an AWWA C901 standard PE Code of 3408. The pipe shall have a pressure class of PC 200 with an outside diameter based dimension ration (DR) of 9 at 73.4 ^{o}F. The manufacturer shall furnish a certified affidavit attesting that all products delivered comply with the requirements of AWWA C901. All pipe shall be marked with the manufacturer's name or trademark, size, material code, pressure class, and AWWA designation number. Pipe shall be supplied in standard lengths as much as possible.

B. Tracer wire shall be a #12 AWG high strength copper clad steel conductor (HS-CCS), insulated with a 30 mil, high density, high molecular weight polyethylene (HDPE) insulation, and rated for direct burial use at 30 volts. HS-CCS conductor must be a 21% conductivity for locating purposes, break load 380# minimum. HDPE insulation shall be RoHS compliant and utilize virgin grade material. Insulation color shall meet the APWA color code standards for identification of buried utilities. Tracer wire shall be Copperhead HS-CCS HDPE 30 mil insulation or approved equal. Direct bury corrosion proof wire connectors shall be installed as necessary during the installation and connection of the tracer wire. Copperhead Snakebite wire connectors or approved equal shall be installed to terminate and connect all tracer wire.

C. PE fittings shall meet the requirements of AWWA C901 and be of the same (or higher) pressure rating as the pipe line. The manufacturer must certify that the fittings are capable of restraining PE pipe or tubing from pullout at the design pressure.

D. Pipe joints shall be of the compression type utilizing a totally confined grip seal and coupling nut. Stainless steel tube stiffener insert shall be used that does not extend beyond the clamp or coupling nut.

Alternatively and at the discretion of the Authority, PE pipe jointed by thermal butt-fusion, in accordance with ASTM D-2657 and the pipe manufacturer's recommendations, may be allowed. For consideration of this pipe jointing method, documentation must be provided to show that the proposed pipe installer is properly certified/pre-qualified by the pipe manufacturer. PE pipe segments adjacent to butt-fusion joints must be rigidly supported for a distance of one foot beyond the joint. Termination to pump basins, valves and fittings shall be flange assemblies.

2.3 VALVES/CLEANOUTS:

A. PVC ball or plug valves shall be installed within cleanout manholes on low pressure lines at the locations indicated on the drawings. Valves installed in valve/cleanout pits shall be actuated with a quarter turn type hand level.

B. Brass ball valve curb stops shall be provided on all low pressure service connections. The curb stops shall be as manufactured by the Ford Meter Box Company, Inc., or approved equivalent. Buried valves shall be actuated with an underground actuator through a cast iron valve box.

C. Cleanouts shall be constructed of PVC, SDR 21 material as indicated on the detail drawings. Ball valves shall be installed at the locations indicated on the detail drawings.

2.4 VALVE BOXES:

A. Cast iron valve boxes shall be installed over all buried valves in accordance with AWWA C500-80.

2.5 COMBINATION AIR RELEASE/VACUUM BREAK VALVES:

A. Combination air release/vacuum break valves shall be installed where called for on the plans. Work shall include the complete assembly with tapping saddle, shutoff valve, air release and vacuum valve, piping and fittings, all complete and ready for operation. The valve shall function automatically to release into the atmosphere both large and small amounts of air that accumulate in the pipeline. The valve shall also function to admit air into the pipeline under emergency conditions or when it is being drained. The valve shall be of a type having a stainless steel float enclosed in the valve body with a lever for opening and closing the valve. The assembly shall not leak nor shall the valve stick under service conditions. All components of the valve assembly shall be stainless steel material. The valves shall be as manufactured by A.R.I. Valves, Inc., or approved equivalent.

B. The Contractor shall furnish the valve with shut-off valve, blow-off valve, quick disconnect couplings, and a minimum of 5 feet of hose to permit backflushing after installation without dismantling the valve.

2.6 PRECAST REINFORCED CONCRETE AIR RELEASE VALVE MANHOLES:

A. Precast Reinforced Concrete Manhole: Manholes shall be as specified in Section 02730.

B. Frame and Cover: Frame and cover shall be as specified in Section 02730.

C. Manhole Steps: Steps shall be as specified in Section 02730.

D. Precast Concrete Manhole Grade Rings: Grade rings shall be as specified in Section 02730.

2.7 INSPECTION:

A. Field Inspection: All pipe and appurtenances shall be furnished, installed and tested for defects in material and/or workmanship in the manner specified and in the presence of and as approved by the Authority.

2.8 HANDLING OF MATERIAL:

A. Replacement of Damaged Material: The Contractor shall replace, at his own expense, all material furnished by him and found defective in manufacture or damaged in handling after delivery by the manufacturer. This shall include the furnishing of all materials and labor required for replacement of installed material. Any material furnished by the Authority that becomes damaged after acceptance by the Contractor shall be replaced by the Contractor at his own expense.

B. Responsibility for Safe Storage: The Contractor shall be responsible for the safe storage of material furnished by or to him, and accepted by him, and intended for the work until it has been incorporated in the completed project. The interior of all pipe, fittings and other accessories shall be kept free from dirt and foreign matter at all times. All equipment and materials subject to damage from freezing shall be drained and stored in a manner which will protect them.

C. Hauling: All materials furnished by the Contractor shall be delivered and distributed at the site by the Contractor. Materials furnished by the Authority shall be picked up by the Contractor at points designated and hauled to and distributed at the site.

D. Pipe, fittings, items of equipment, and other materials of construction shall be loaded and unloaded opposite or near the place where it is to be laid in the trench, or as otherwise directed by the Authority. Under no circumstances should lawns, grass plots or other private property be used for this purpose without the consent of the property owner.

E. At Site of Work: In distributing the material at the site of the work, each piece shall be unloaded opposite or near the place where it is to be laid in the trench, or as otherwise

directed by the Authority. Under no circumstances should lawns, grass plots or other private property be used for this purpose without the consent of the property owner.

F. Care of Pipe Lining: Pipe shall be handled so the lining will not be damaged. If, however, any part of the lining is damaged, the repair shall be made by the Contractor at his expense in a manner satisfactory to the Authority.

G. Handling of Force Main Materials into Trench: Proper implements, tools and facilities satisfactory to the Authority shall be provided and used by the contractor for the safe and convenient prosecution of the work. All pipe, fittings, valves, etc. shall be carefully lowered into the trench piece by piece by means of a derrick, ropes or other suitable tools or equipment, in such a manner as to prevent damage to sewer line materials, protective coatings and linings. Under no circumstances shall such materials be dropped or dumped into the trench.

PART 3 - CONSTRUCTION

3.1 PIPE INSTALLATION:

A. General: All pipe shall be laid and maintained to the required lines and grades with fittings and valves at the required locations; spigots centered in bells; and all valves plumb. The pipe shall be laid in the backfill materials as specified. Pipe laying shall commence at the lowest point and proceed upgrade.

B. Construction Control: During the installation of a force main, the pipe shall be laid at a constantly increasing grade to each high point, air release manhole or point of discharge, as shown on the contract drawings. The Contractor shall provide sufficient construction control to assure that there are no sags or loss in grade in the force main which could tend to accumulate air other than at the high points shown on the drawings. Failure to comply with this requirement shall necessitate the Contractor to take remedial steps to correct this situation. All such costs shall be borne by the Contractor.

C. Variations: The Authority reserves the right to vary the line and/or grade from that shown on the drawings for the pipe lines and manholes and to vary the location of fittings and valves when such changes may be necessary or advantageous. No claims for extra work will be allowed for changes in location or grade except as such changes are made after trenching has been done.

D. Caution in Excavation: The Contractor shall proceed with caution in the excavation and preparation of the trench so that the exact location of underground structures, both known and unknown, may be determined, and he shall be held responsible for the repair of such structures when broken or otherwise damaged because of carelessness on his part.

E. Subsurface Explorations: Whenever, in the opinion of the Authority, it is necessary to explore and excavate to determine the location of existing underground structures, the Contractor shall make explorations and excavations for such purposes. If the Contractor is required to perform additional work in making the explorations and excavations, extra compensation will be allowed for such additional work.

F. Depth of Pipe: All pipe shall be laid to the depth shown on the contract drawings or a minimum of 4.0 feet from grade to the crown of pipe.

G. Laying Pipe: Every precaution shall be taken to prevent foreign material from entering the pipe while the pipe is being placed in the trench. During laying operations, no debris, tools, clothing or other material shall be placed in the pipe.

H. Precautions shall be taken to prevent dirt from entering the joint space.

I. At times when pipe laying is not in progress, the open ends of the pipe shall be closed by a watertight plug or other means approved by the Authority. This provision shall apply during the noon hour as well as overnight. If water is in the trench, the seal shall remain in place until the trench is pumped completely dry.

J. Cutting Pipe: The cutting of pipe for inserting valves, fittings or closure pieces shall be done in a neat and workmanlike manner, without damage to the pipe to leave a smooth end at right angles to the axis of the pipe.

K. Permissible Deflection of Joints: If deflection is required, make after joint is assembled. The amount of deflection shall not exceed 50% of the maximum limits as specified in the AWWA C600, latest revision.

L. Unsuitable Conditions for Laying Pipe: No pipe shall be laid in water or when, in the opinion of the Authority, trench conditions are unsuitable.

M. Horizontal Directional Drilling: Installing PE/HDPE Pipe utilizing horizontal directional drilling may be used if approved by the Authority. Provide a swivel to reaming assembly and pull section of pipe to minimize torsion stress on pull section after drilling pilot hole. Hold reaming diameter to 1.5 times outside diameter of pipe being installed. Protect pull section as it proceeds during pull back so it moves freely and is not damaged. Pull detection wire along with pipe. When connecting to adjacent pulled or non-pulled section of pipe, allow pull section of pipe to extend past termination point. Replace portions of pipeline not in compliance with Authority’s specifications at no additional cost to the Authority. Install detection wire without splices. Locate wires on top and along pipe. Allow adequate slack and support to protect wires from damage during backfilling operations. Test each detection wire for continuity after backfill is completed. If test for continuity is negative, repair or replace at Authority's direction.

3.2 JOINTS:

A. Mechanical Joint: The spigot end of the pipe shall be centrally located in the bell so that the rubber gasket is evenly sealed. All loose rust or foreign matter shall be removed from the inside surfaces of the bell and outside surface of the spigot prior to assembly. Bolts shall be tightened uniformly with a racket wrench so as to effect the joint seal. The normal range of bolt torques to be applied are:

Bolt Size (Inches)	Torque - Ft. Lbs.
5/8	45 - 60
3/4	75 - 90
1	100 - 120
1-1/4	120 - 150

If effective sealing is not attained at the maximum torque indicated above, the joint shall be disassembled and reassembled after thorough cleaning.

B. Push-On Type Joints: The joint shall be assembled as recommended by the manufacturer so as to effect the joint seal.

3.3 SERVICE CONNECTIONS:

A. General: Service connections shall be made using appropriately sized PVC/HDPE wye fittings and reducers.

3.4 SETTING FITTINGS AND VALVES:

A. General: Valves and fittings shall be set and jointed to pipes in the manner hereinbefore specified for cleaning, laying and jointing pipe.

B. Valve Pipes: A concrete valve pit shall be provided for every air release and vacuum valve meeting the requirements for a manhole as hereinbefore specified. The pits shall be constructed to permit valve repairs and afford protection to the valve and pipe from impact where they pass through the pit walls.

3.5 ANCHORAGE:

A. Anchorage for Bends: All bends deflecting 11.25 degrees or more on mains 4-inches in diameter or larger shall be provided with restrained joints to prevent movement. Suitable metal rods shall be used only as shown on the plans or directed by the Authority. All dead end valves shall be rodded to main line with 3/4-inch threaded tie rods if a restrained joint is not utilized. Mechanical joint retainer glands shall not be used.

B. Reaction Backing: Reaction backing shall be concrete of a mix not leaner than 1 cement; 2-1/2 sand; 5 stone; and having a compressive strength of not less than 2,000 psi, at 28 days. Backing shall be placed between solid ground and the fitting to be anchored; the area of bearing on the pipe and on the ground in each instance shall be as shown on the plans or directed by the Authority. The backing shall, unless otherwise shown or directed, be so placed that the pipe and fitting joints will be accessible for repair.

C. Metal Harness: Metal harness of tie rods of adequate strength to prevent movement shall be used. Steel rods or clamps shall be galvanized and painted with two coats of asphalt type paint.

3.6 CONCRETE CRADLE AND ENCASEMENT:

A. Preparation: Prior to the formation of the cradle or encasement, temporary supports consisting of solid concrete bricks or cap blocks shall be used to support the pipe in place. Temporary supports shall have minimum dimensions and shall support the pipe at not more than two locations, one at the bottom of the barrel of the pipe adjacent to the shoulder of the socket and the other near the spigot end.

B. Placing: After jointing of the pipe has been competed, concrete shall be uniformly poured beneath and on both sides of the pipe. Placement shall be done by the use of suitable equipment. The concrete shall be wet enough during placement to permit its flow, without excessive prodding, to all required points around the pipe surface. The width of the cradle shall be such as to completely fill the trench width. In case of extremely wide trenches, concrete encasement may be confined above the top of the pipe to a narrower width, but in no case shall it be less than the width of trench required for the size of pipe being used.

C. Before depositing concrete, the space within the limits of the pour shall have been cleared of all debris and water. Water shall not be allowed to rise adjacent to, or flow over, concrete deposited for less than 24 hours. Concrete shall be protected from the direct rays of the sun and kept moist, by a method acceptable to the Engineer, for a period of 7 days or until backfilling is begun. In no case shall backfill begin within 24 hours of the time of placing and the Authority shall have strict control of the rate of backfilling.

3.7 HYDROSTATIC TESTS:

A. Pressure Test: After the pipe has been laid and backfilled as specified, all newly laid pipe or any valves section thereof shall be subjected to a hydrostatic pressure of 100 pounds per square inch or 50% in excess of the normal working pressure, whichever is greater.

B. Where any section of a main is provided with concrete reaction backing, the hydrostatic pressure test shall not be made until at least 5 days have elapsed after the concrete reaction

backing was installed. If high early strength cement is used in the concrete reaction backing, the hydrostatic pressure test shall not be made until at least 2 days have elapsed.

C. Duration of test shall be at least two hours.

D. Procedures: Each section of pipe shall be slowly filled with water and the specified test pressure, based on the elevation of the lowest point of the line or section, under test and corrected to the elevation of the test gauge, shall be applied by means of a pump connected to the pipe in a manner satisfactory to the Authority. The pump, pipe connections and all necessary apparatus including gauges, shall be furnished by the Contractor. The Contractor will make all taps into the pipe, and furnish all necessary assistance for conducting the tests.

E. Expelling Air Before Test: Before applying the specified test pressure, all air shall be expelled from the pipe. If permanent air vents are not located at all high points, the Contractor shall make the necessary taps at such points before the test is made. After the test has been completed, the Contractor shall insert plugs at the tapping points.

F. Examination Under Pressure: Any cracks or defective pipes, fittings or valves discovered in consequence of this pressure test, shall be removed and replaced by the Contractor with sound material, and the test shall be repeated until satisfactory to the Authority.

G. Leakage Test: A leakage test shall be conducted concurrently with the pressure test. The Contractor will furnish laboratory calibrated test gauge and measuring device, and all necessary assistance to conduct the test.

H. Leakage Definition: Leakage is defined as the quantity of water that must be supplied into the newly laid pipe, or any valve section thereof, to maintain the specified leakage test pressure after the pipe has been filled with water and the air expelled.

I. Permitted Leakage: No pipe installed will be accepted until the leakage is less than the number of gallons per hour as determined by the formula:

$$L = \frac{ND\,(P)^{1/2}}{7400}$$

in which "L" equals the allowable leakage in gallons per hour; "N" is the number of joints in the length of pipelines tested; "D" is the normal diameter of the pipe, in inches, and "P" is the average test pressure during the leakage test, in pounds per square inch gauge. (The allowable leakage according to the formula is equivalent to 11.65 US gallons per 24 hours per mile of pipe per inch nominal diameter, for pipe in 18 foot lengths evaluated on a pressure basis of 100 psi.)

J. Should any test of pipe laid disclose leakage greater than that specified above, the Contractor shall at his own expense, locate, repair and replace the defective joints, pipe or fittings until the leakage is within the specified allowance.

3.8 COMMON REQUIREMENTS:

A. Authority Presence: The Authority shall monitor the pressure and leakage tests. The Contractor shall notify the Authority of the test day at least 72 hours in advance.

B. If test fails to meet test requirements, the Contractor shall pay for all additional engineering personnel testing time.

C. Weather: No testing will be authorized unless air temperature is 35 degrees F or higher.

D. Field Joints: All field joints of fittings and valves shall be exposed and examined during pressure and leakage test.

E. Acceptance: Observation of successful testing of force mains or manholes by the Authority does not constitute acceptance of the system or any portion thereof.

F. Only upon final inspection by the Authority and upon written acceptance for same will the system or portion thereof be considered substantially completed. Upon such acceptance, the warranty period as specified for the force main or manholes will commence.

G. If, during this final inspection, any irregularities are observed, the condition must be corrected at the Contractor's expense prior to acceptance.

END OF SECTION

G:\BEng-Data\Projects\13-103-01\Specification Revisions\02733.doc

SECTION 11309

PACKAGED INDIVIDUAL GRINDER PUMP STATIONS

SECTION 11309 - PACKAGED INDIVIDUAL GRINDER PUMP STATIONS

PART 1 - GENERAL

1.1 Related Sections:

Section 02201 - Trench Excavation, Backfill, and Restoration
Section 02733 - Low Pressure Sanitary Sewer

1.2 DESCRIPTION OF WORK:

A. The Work within this section includes, but is not limited to, the furnishing and installation of all labor and materials, and performing all work necessary for complete factory-built and tested Simplex and Duplex Grinder Pump Stations, each consisting of a fiberglass or precast concrete basin, grinder pumps, control system, electrical controls, and all necessary appurtenances to form a complete package system. The pumps shall be a submersible end suction centrifugal type grinder unit. For ease of serviceability, all pump motor/grinder units shall be interchangeable.

1.3 QUALITY ASSURANCE:

A. Referenced standards shall be the following:

1. American Society of Testing and Materials (ASTM)
2. Hydraulics Institute (HI)
3. National Electrical Manufacturers Association (NEMA)
4. National Electrical Code (NEC)
5. National Fire Protection Association (NFPA)
6. Underwriter's Laboratories (UL)

B. Manufacturer's Qualifications: Firms regularly engaged in manufacture of packaged simplex grinder pump stations of types and sizes required, whose products have been in satisfactory use in similar service for not less than 5 years.

C. Codes and Standards:

1. NEC Compliance: Comply with the current version of NFPA 70 NEC as applicable to installation and electrical connections of ancillary electrical components of packaged grinder pump stations.

2. Operational Test: Provide operational tests on pumps, motors, and controls, in accordance with standards of the HI. Provide recordings of test that substantiate correct performance of equipment at design head, capacity, speed, and horsepower. All tests shall be conducted in the pump manufacturer’s factory.

1.4 SUBMITTALS:

A. Product Data: Submit manufacturer's technical product data, including installation and start-up instructions, furnished specialties and accessories, and current accurate pump characteristic performance curves with selection points clearly indicated.

B. Shop Drawings: The Contractor shall provide shop drawings for al valves, sump pit, alarm system, controls, grinder pumps, and entry hatch.

C. Wiring Diagrams: Submit manufacturer's electrical requirements for packaged simplex and\or duplex grinder pump stations including ladder-type wiring diagrams for interlock and control wiring, clearly indicating required field electrical connections.

D. Maintenance Data: Submit maintenance data and parts list for each packaged simplex and\or duplex grinder pump station, control, and accessory, including "trouble-shooting" maintenance guide. Include this product data, shop drawings, and wiring diagrams in maintenance manual.

1.5 DELIVERY, STORAGE, AND HANDLING:

A. Handle packaged grinder pump stations carefully to prevent external and internal component damage, breakage, denting, or scoring of pump chamber's interior or exterior finish. Do not install damaged equipment; either replace damaged components or return unit to factory for replacement.

B. Comply with manufacturer's rigging and installation instructions for unloading packaged grinder pump stations, and setting them in final location.

PART 2 - PRODUCTS

2.1 ACCEPTABLE MANUFACTURERS:

A. Subject to compliance with requirements, manufacturers offering packaged lift stations which may be incorporated in the work include, but are not limited to, Barnes – Ultra Grind packaged sewage grinder pump system or approved substitution.

2.2 OPERATING CONDITIONS

A. Grinder pumps must be capable of handling materials commonly found in sanitary sewage collection systems, such as plastics, rags, grit, wood, etc. Grinder pump stations must be suitable for installation in all climatic conditions found at the job site. All piping components must be kept below frost line to protect against freezing and/or equipment damage.

2.3 PACKAGED GRINDER PUMP STATIONS

A. Pumps shall be manufactured in the United States utilizing domestic parts and components in its construction. The volute, seal plates and motor housing shall be constructed of high quality ASTM class 30 minimum cast iron. The pumps shall be painted with air dry enamel. All exposed hardware shall be 300 series stainless steel. Discharge connection shall be standard 1 ¼ -inch NPT in the vertical position.

B. The pump impeller shall be of the recessed, vortex design. Pumps with standard centrifugal semi-open impeller designs shall not be acceptable. The impeller shall be of 85-5-5-5 bronze construction and machined for threading to the motor shaft. The impeller shall be capable of being trimmed to meet specific performance characteristics.

C. The pump shall have a three bearing design consisting of an upper ball bearing, an intermediate ball bearing restrained for the purpose of carrying the thrust loads, and a lower bronze sleeve bearing to carry radial loads and prevent shaft deflection imposed by the pump impeller and grinder operation. Designs reducing the number of bearings will not be considered equal. The stator design must be such that it allow for easy removal from its housing for replacement. Shrink or press fits shall not be considered acceptable for stator assembly or replacement. The motor shaft shall be of 416 stainless steel. Air-filled motors shall not be acceptable.

D. Standard residential pumps shall be 2 horsepower, and shall be capable of pumping at the following characteristics:

Max Q= No greater than 50 gpm @ 10 ft. TDH
Min Q = 10 gpm @ 90 ft. TDH
Shut-Off- Head = 105 ft. or greater

Any applications which require a grinder pumping station at flow rates or head conditions beyond the ranges established above shall be reviewed by the Authority on a case by case basis.

E. The pumps shall be designed to reduce all material found in normal domestic and light industrial sewage, including plastics, rubber, sanitary napkins, and disposable diapers into a finely ground slurry.

F. The grinder mechanisms shall consist of radial cutter threaded and locked on the motor shaft by a counter sunk washer in conjunction with a flat head cap screw, and a shredding ring containing a minimum of fifteen flow passages with cutting edges. Grinding shall be accomplished by a slicing action as opposed to a chopping action. Grinder design shall be able to alternately engage cutters to require half the starting torque. The shredding ring shall be reversible to provide twice the cutting edge life. Both the shredding ring and radial cutter shall be constructed of 440C stainless steel hardened to a minimum Rockwell C55 and shall be finish ground for a fine cutting edge. Two stage cutter mechanisms requiring external adjustment for proper clearance shall not be acceptable.

G. The grinder shall be placed immediately below the pumping elements and shall be direct-driven by a single, one-piece, stainless steel motor shaft. The grinder assembly shall be balanced and operate without objectionable noise or vibration over the entire range of recommended operating pressures. The grinder shall be constructed so as to eliminate clogging and jamming under all normal operating conditions including starting.

H. The grinder shall be capable of reducing all components in normal domestic sewage, including a reasonable amount of "foreign objects", such as paper, wood, plastic, glass, rubber, and the like, to finely-divided particles which will pass freely through the passages of the pump and the 1¼-inch diameter discharge piping. The grinding mechanism must be capable of handling reasonable amounts of grit, often found in domestic sewage systems.

I. The minimum net effective storage volume between pump shut-off elevation and invert of influent line shall be 150 gallons. Any applications which may require a larger storage volume shall be reviewed by the Authority on a case by case basis.

J. Single phase motors shall be of the capacitor start, capacitor run design, 230 volt, single phase, 2 HP as listed above. The motor shall meet the performance requirements of a NEMA L speed-torque curve. The motor shall be constructed with the open windings operating in a sealed housing which contains clean dielectric oil for heat dissipation from the windings and for lubrication of the bearings.

K. Protection against excessive temperature shall be provided by a heat sensor thermostat attached to the stator windings and connected in series with the contactor coil in the control panel.

L. The pump shall be equipped with fifteen feet of type SO power cable. Heat shrink tubes shall be used to connect power cord leads with motor leads. A master heat shrink tube shall be provided and filled with epoxy to seal the outer cable jacket and the individual strands to prevent water from entering the motor housing. A secondary rubber pressure grommet shall be provided as an additional sealing point and strain relief at the point of cable entry. Cable entry designs utilizing terminal boards to connect power cord leads with motor leads shall not be acceptable.

M. Motor shall be amply rated for the head and capacity values specified, on continuous duty, without exceeding 1.0 service factor load at the minimum capacity design point, and without exceeding the motor full service factor load at any head.

N. Motors shall be equipped with double shaft seals to prevent leakage between the motor and pump. The seal shall consist of two Type 21 oil-lubricated rotary shaft seals in an oil-filled chamber. The materials of construction shall be carbon for the rotating faces and ceramic for the stationary faces, lapped and polished to a tolerance of one light band, with 300 stainless steel hardware, with all elastomer parts of Buna-N. A single mechanical seal or a single mechanical seal in conjunction with a lip type seal will not be acceptable.

O. Each basin shall be equipped with a 300 series stainless steel "C" channel rail assembly(ies) to facilitate removal of the pump(s) from ground level. Stainless steel lifting chains shall be supplied with each pump for pump removal.

P. The pump discharge shall be equipped with factory installed, gravity-operated, ball-type integral check valve built into the discharge pipe. This valve will provide a full-ported passageway when open, and shall introduce a friction loss of less than 6-inches of water at maximum rated flow. In addition, all discharge piping shall be equipped with a redundant check valve inside the pump basin to ensure maximum protection against backflow. Parts will be made of 300 series stainless steel and/or Schedule 80 PVC to ensure corrosion resistance, dimensional stability, and fatigue strength. The valve operation shall provide maximum seating capability, even at a very low back pressure. A 1¼-inch bronze plug valve shall be installed in the discharge piping to provide shut-off capabilities during pump removal, and shall be fitted with an integral stainless steel extension handle. The extension handle shall extend up to within 6 inches of the top of the basin for ease of access and operation, and shall be secured at the top of the basin with a stainless steel bracket. The pump discharge piping within the pump basin and the discharge force main shall be connected with a 3-foot section of flexible stainless steel piping to accommodate differential settling of the force main and the pump basin. Flexible stainless steel discharge couplings shall be made of an inner corrugated hose sheathed in an outer braid and rated for 345 psi.

Q. The pump shall be constructed with a positively primed flooded suction configuration. As added assurance that the pump cannot lose prime even under negative pressure conditions in the discharge piping system, the design shall provide for air relief in the discharge piping in the event a negative pressure is reached in the pump station discharge piping. This will automatically close when the pump is running and open to atmosphere when the pump is off. Add Anti-Siphon Valve like WESA?

R. Non-fouling wastewater level detection for controlling pump and alarm operation shall be accomplished by use of a float system. For simplex pumps, three liquid level sensors shall be provided for each pump unit to control operation of the pump and high-water alarm. For duplex pumps, four liquid level sensors shall be provided for each pump unit. The level sensors shall be mercury-type pilot duty devices mounted in a corrosion resistant polypropylene housing. A weight shall be attached to the cord above the float to hold the switch in place and prevent sharp bends in the cord. A stainless steel float bracket shall be installed within the basin. Level controls shall be set at the elevation indicated on the plans.

S. The control/junction box shall be located in the wet well and shall have a NEMA 6 rating to protect against accidental submersion. Conduit shall enter the junction box from below. Conduit within the basin shall be stainless steel. Float cords shall exit the side of the junction box using 1/2” tap threads with submersible plastic compression grommets. A conduit seal shall be installed outside of the basin to prevent water from entering the junction box. A flexible stainless steel conduit coupling, supplied by the pump manufacturer, shall be installed on the outside of the basin.

T. Each simplex and duplex grinder pump station control panel shall include a NEMA 4X fiberglass enclosure. All exterior hardware of the control panel shall be stainless steel. A running time meter measuring hours and tenths of hours of operation up to 99999.9 hours shall be furnished for each pump motor indicated. This shall be a 120 VAC device operating from the control voltage by an auxiliary contact of the motor starter or other run contact. The control panel shall include circuit breaker(s) and all necessary components to accomplish proper pump and control operation including the following alarm capabilities:

1. When liquid level in sewage wet-well rises above the alarm level, a visual alarm will be activated.
2. Visual alarm remains illuminated until sewage in wet-well returns to normal operating level.

The visual alarm shall be an amber fluted lens mounted to the top of the enclosure in such a manner as to maintain rain proof integrity. The visual alarm lamp shall be installed utilizing a separate circuit breaker than the pump(s).

U. Construction shall be custom molded fiberglass reinforced polyester resin with interior surface to be gel-coated from 10- to 20-mil thick to provide a smooth sealed surface. Simplex pump basins shall be 36 inches in diameter, and duplex pump basins shall be 48 inches in diameter. The wall thickness shall be sufficient to withstand a water-saturated sand load of 120 pounds per cubic foot with a safety factor of two at all depths. One 4-inch Schedule 40 PVC pipe adapter-type inlet shall be furnished and installed in coordination with the sewer lateral. The PVC pipe adapter and gasket material shall be shipped loose for field installation. An anti-flotation collar shall be provided as an integral part of the basin assembly. The collar shall extend a minimum of 3 inches on the radius of the basin.

V. The basin cover shall be one-piece, fiberglass construction with a minimum diameter 4 inches greater than the basin. The outside surfaces shall be gel coated to provide a smooth clean surface. Covers shall be a minimum of 3/8-inch thick and shall be grass green in color. Covers shall be securely held in place by a minimum of six stainless steel bolts threaded into stainless steel inserts in the top collar of the basin.

W. Concrete basins shall be utilized in areas subject to traffic loadings such as driveways and parking lots. Precast reinforced concrete chambers shall conform to ASTM C-478 and shall be of watertight construction. Joints between sections shall be constructed with preformed plastic joint sealing material. The exterior of the basins shall be coated with two coats of Pennsbury 32-B-4 Pennoxy-Tar, or approved equal, to a dry film thickness of 7 to 8 mils per coat.

X. Concrete basins shall be equipped with an access frame and hatch assembly of extruded aluminum. Each cover shall be provided with a lifting handle, safety catch, and locking hasp. The surface shall be of a non-skid checkered pattern. Frame and cover shall be designed to withstand H-20 traffic loads.

The top of concrete basins shall be installed a minimum of 4 inches above the surrounding paving, and a minimum of four concrete-filled steel bollards shall be installed around the basin.

Y. All materials exposed to wastewater shall have inherent corrosion protection: i.e., fiberglass, stainless steel, PVC.

Z. The Grinder Pump shall be free from electrical and fire hazards as required in a residential environment.

PART 3 - EXECUTION

3.1 FACTORY TEST

A. Each grinder pump shall be submerged and operated for 5 minutes (minimum). Actual appurtenances and controls which will be installed in the field, shall be 100% factory tested. Certified test results shall be supplied by the manufacturer showing the operation of each grinder pump at three (3) different points on its curve, with the maximum pressure no less than required by the system design. The Engineer reserves the right to inspect such testing procedures with representative of the Owner, at the grinder pump manufacturer's facility.

B. The pump manufacturer shall also perform the following inspections and tests before shipment form the factory on all pumps.

1. A check of the voltage and frequency shall be made as shown on the name plate.

2. A motor and cable insulation test for moisture content of insulation defects shall be made.

3. A vibration test shall be run on each unit at maximum rpm with maximum velocity values not to exceed 1.0 mils peak-to-peak.

4. A written report shall be provided showing the aforementioned tests have been performed in accordance with the specifications.

3.2 DELIVERY

A. All Grinder Pumps will be delivered to the job site, completely assembled, ready for installation. Each fiberglass grinder pump basin will have a minimum of four (4) lifting eyes to facilitate unloading if not suitable for lifting by lifting strap.

3.3 INSTALLATION

A. Backfill with excavated material approved by the Engineer and containing no soil lumps, stone, concrete, or foreign objects larger than one (1) inch in maximum dimension or with

Class 1S material consisting of No.8 coarse aggregate to 6-inches below grade; then topsoil and seed top 6-inches.

3.4 START-UP AND FIELD TESTING

A. The manufacturer shall provide the services of qualified factory trained technician(s) who shall inspect the placement and wiring of each station, perform field tests as specified herein, and instruct the owner's personnel in the operation and maintenance of the equipment before the station are accepted. All equipment and materials necessary to perform testing shall be the responsibility of the installing contractor. This will include, as a minimum, a portable generator (if temporary power is required) and water in each basin.

B. Upon completion of the installation, the factory-authorized technician will supervise the performance of the following test on various stations:

1. Make certain the discharge shut-off valve is fully open. In some installations, there may be a valve (s) at the street main that must also be open.

2. Fill basin with water to level on inlet line.

3. Verify voltage is correct and record actual readings.

4. Turn ON pump power circuit. Alarm should light. Pump should also initiate operations. Record amperage while pump is running. Verify that alarm light turns OFF as liquid level falls below alarm point. Verify pump shuts OFF at proper liquid level.

C. Upon completion of the start-up and testing, the manufacturer's start-up representative shall submit to the engineer the start-up authorization for describing the results of the tests performed for each of the Grinder Pump Stations. Final acceptance of the system will not occur until authorization forms have been received for each pump station tested.

PART 4 - OPERATION AND MAINTENANCE

4.1 SPARES

A. The manufacturer will supply one spare grinder pump with movable fittings, check valves, lifting chain, motor, complete control panel, control panel components, and one complete float assembly for every ten units installed.

4.2 OPERATION AND MAINTENANCE MANUALS

A. The manufacturer shall supply four copies of Operation and Maintenance Manuals to the Authority. Each copy shall be laminated in a plastic three ring binder and shall have a complete exploded parts list and the following service contracts:

1. An authorized repair facility (capable of motor rewinding) within 20 miles of the Penn Township Municipal Building.

2. Local stocking distributor within 100 miles of the Penn Township Municipal Building.

3. Factory direct contact.

B. The manufacturer will supply a minimum of five sets of standard submittal drawings, and four copies of the operation and maintenance manuals and parts lists. The standard submittals will consist of:

1. Pump outline data;
2. Control data;
3. Access frame data;
4. Typical installation guides and drawings;
5. Technical manuals;
6. Parts lists; and
7. Accessory data.

4.3 WARRANTY

A. The pump manufacturer shall warrant each of the units being supplied to the owner against defects in workmanship and material for a period of 18 months from start-up under printed form and apply to all similar units.

END OF SECTION

G:\BEng-Data\Projects\13-103-01\Specification Revisions\11309.doc

CONSTRUCTION DETAILS

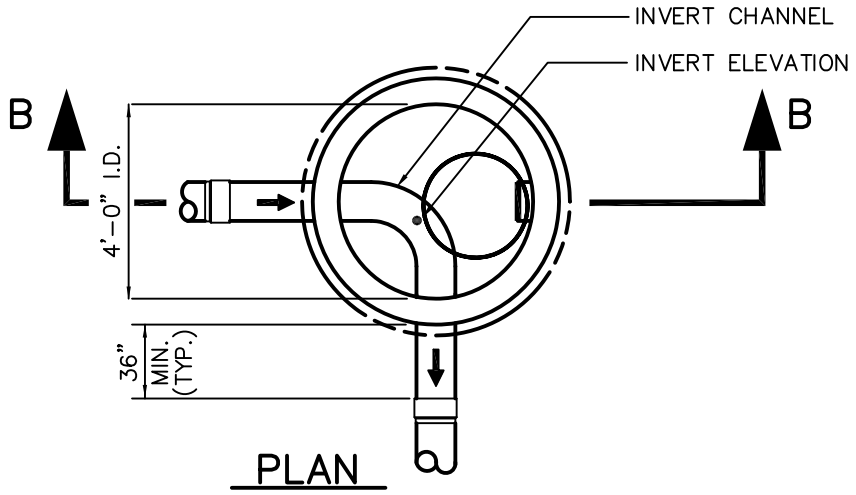

PLAN

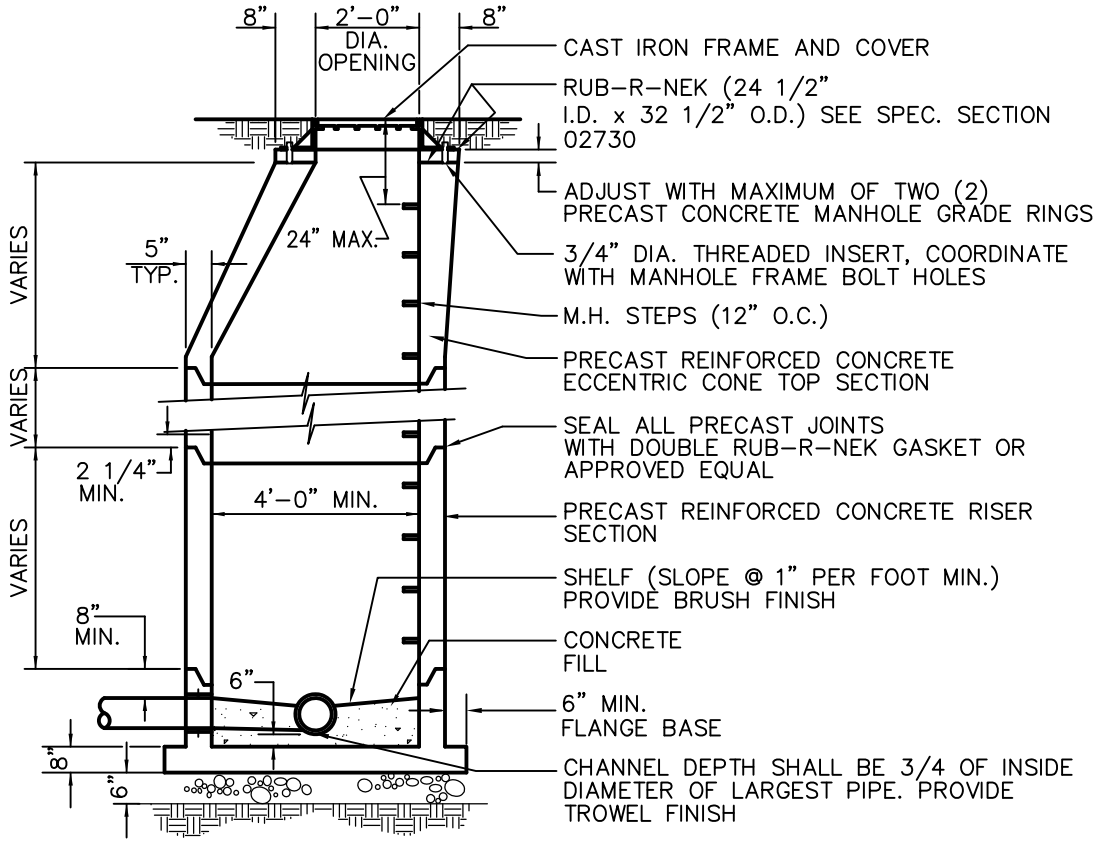

SECTION B-B

NOTES:

1. MECHANICALLY VIBRATED PRECAST CONCRETE, RISER AND TOP SHALL CONFORM TO A.S.T.M. SPEC. C-478.
2. MANHOLE SHALL HAVE 2 COATS BITUMASTIC COATING ON EXTERIOR (INCLUDING BOTTOM).
3. MAINTAIN POSITIVE GRADE THROUGH MANHOLE.
4. ALL OPENINGS AROUND PIPES SHALL BE FINISHED WITH NON-SHRINK GROUT.
5. CONTRACTOR MAY USE PRECAST INVERT BASES.
6. IF 3/4" DIA. THREADED INSERTS ARE NOT PROVIDED ON STRUCTURE. HOLES FOR THE THREADED INSERT SHALL BE SEALED WITH EPOXY.
7. FOR MANHOLES WITH SEWER LINES ENTERING AT GREATER THAN 10% SLOPES, INDIVIDUAL SHOP DRAWINGS MUST BE SUBMITTED BY THE CONTRACTOR AND REVIEWED BY THE ENGINEER.
8. INTERIOR OF MANHOLE SHALL HAVE PROTECTIVE PVC COATING IN ACCORDANCE WITH SPECIFICATIONS. SEE PLAN VIEW OF SANITARY SEWER LAYOUT FOR LOCATION OF PVC COATED MANHOLES.
9. MANHOLE CHANNELS, BENCH, AND ALL INTERIOR SURFACES SUBJECT TO CORROSION SHALL RECEIVE FACTORY APPLIED CORROSION RESISTANT COATING SHOP DRAWINGS SHALL BE SUBMITTED FOR COATING (FOR PVC COATED MANHOLES ONLY).

PRECAST CONCRETE MANHOLE

NOT TO SCALE

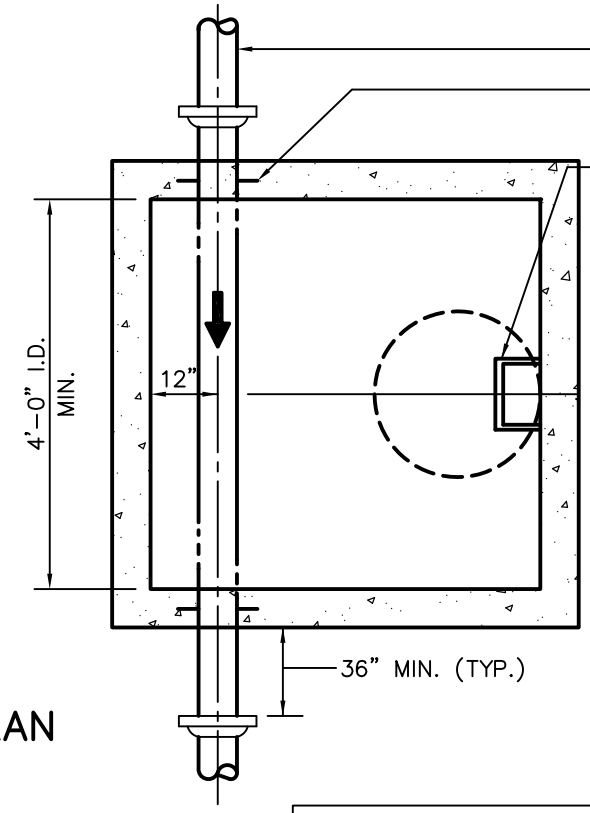

PLAN

NOTES:

1. MECHANICALLY VIBRATED PRECAST CONCRETE, RISER AND TOP SHALL CONFORM TO A.S.T.M. SPEC. C-478.
2. MANHOLE SHALL HAVE 2 COATS BITUMASTIC COATING ON EXTERIOR (INCLUDING BOTTOM).
3. MAINTAIN POSITIVE GRADE THROUGH MANHOLE.
4. ALL OPENINGS AROUND PIPES SHALL BE FINISHED WITH NON-SHRINK GROUT.
5. CONTRACTOR MAY USE PRECAST INVERT BASES.
6. IF 3/4" DIA. THREADED INSERTS ARE NOT PROVIDED ON STRUCTURE. HOLES FOR THE THREADED INSERT SHALL BE SEALED WITH EPOXY.

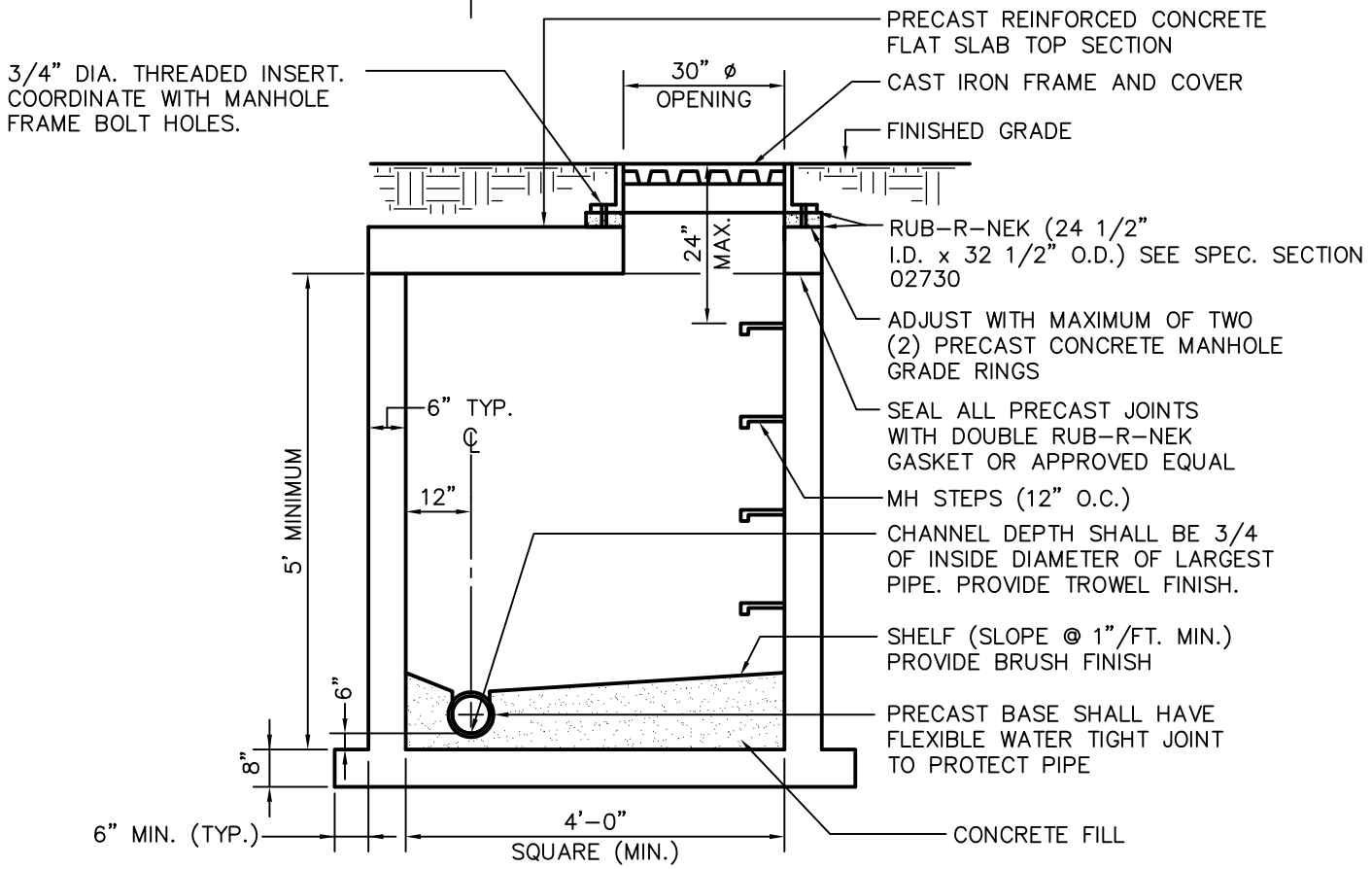

SECTION

SAMPLING MANHOLE

NOT TO SCALE

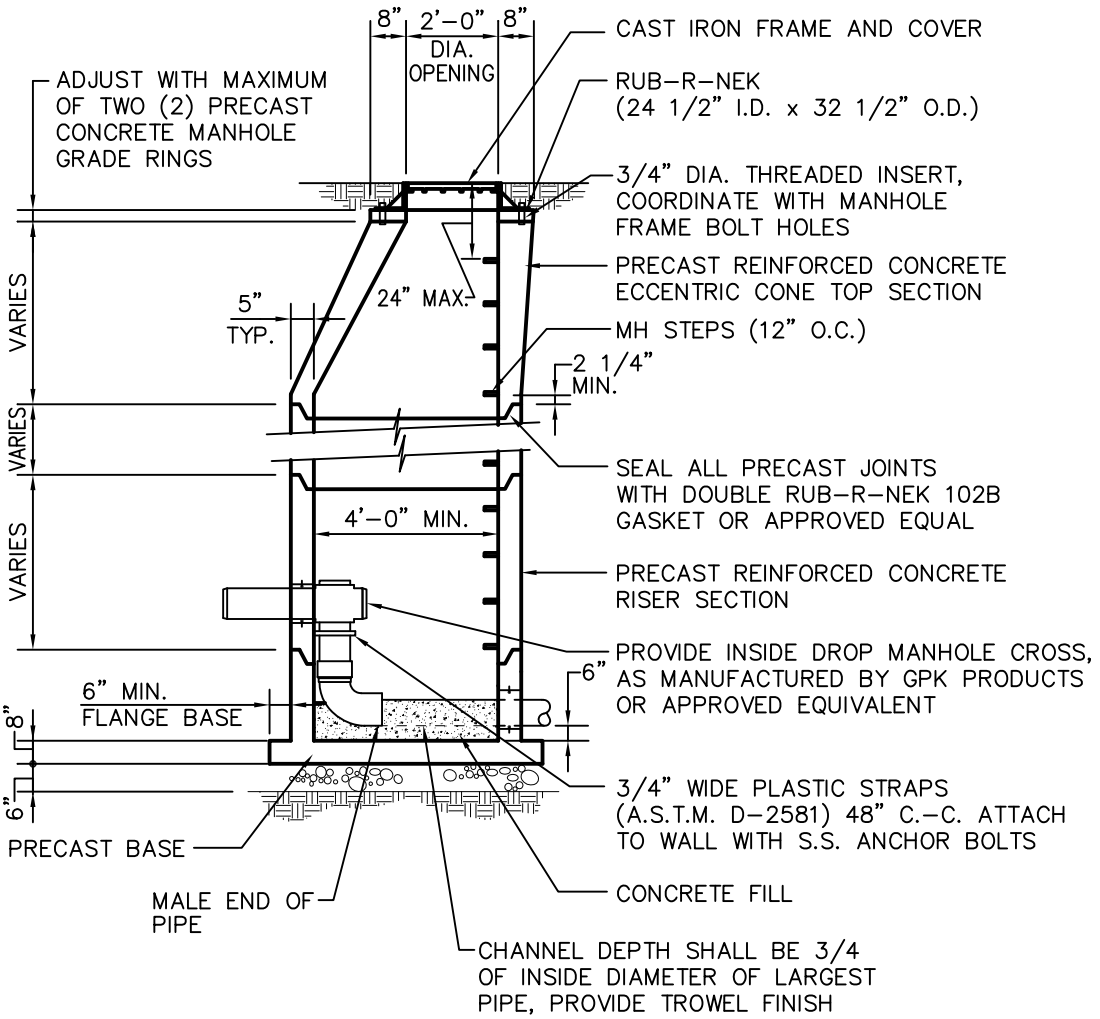

NOTES:

1. MECHANICALLY VIBRATED PRECAST CONCRETE, RISER AND TOP SHALL CONFORM TO A.S.T.M. SPEC. C-478.
2. MANHOLE SHALL HAVE 2 COATS BITUMASTIC COATING ON EXTERIOR (INCLUDING BOTTOM).
3. MAINTAIN POSITIVE GRADE THROUGH MANHOLE.
4. ALL OPENINGS AROUND PIPES SHALL BE FINISHED WITH NON-SHRINK GROUT.
5. CONTRACTOR MAY USE PRECAST INVERT BASES.
6. IF 3/4" DIA. THREADED INSERTS ARE NOT PROVIDED ON STRUCTURE. HOLES FOR THE THREADED INSERT SHALL BE SEALED WITH EPOXY.
7. FOR MANHOLES WITH SEWER LINES ENTERING AT GREATER THAN 10% SLOPES, INDIVIDUAL SHOP DRAWINGS MUST BE SUBMITTED BY THE CONTRACTOR AND REVIEWED BY THE ENGINEER.
8. INTERIOR OF MANHOLE SHALL HAVE PROTECTIVE PVC COATING IN ACCORDANCE WITH SPECIFICATIONS. SEE PLAN VIEW OF SANITARY SEWER LAYOUT FOR LOCATION OF PVC COATED MANHOLES.
9. MANHOLE CHANNELS, BENCH, AND ALL INTERIOR SURFACES SUBJECT TO CORROSION SHALL RECEIVE FACTORY APPLIED CORROSION RESISTANT COATING SHOP DRAWINGS SHALL BE SUBMITTED FOR COATING (FOR PVC COATED MANHOLES ONLY).

PRECAST CONCRETE INSIDE DROP MANHOLE (FOR 8" AND 10" PIPE)

NOT TO SCALE

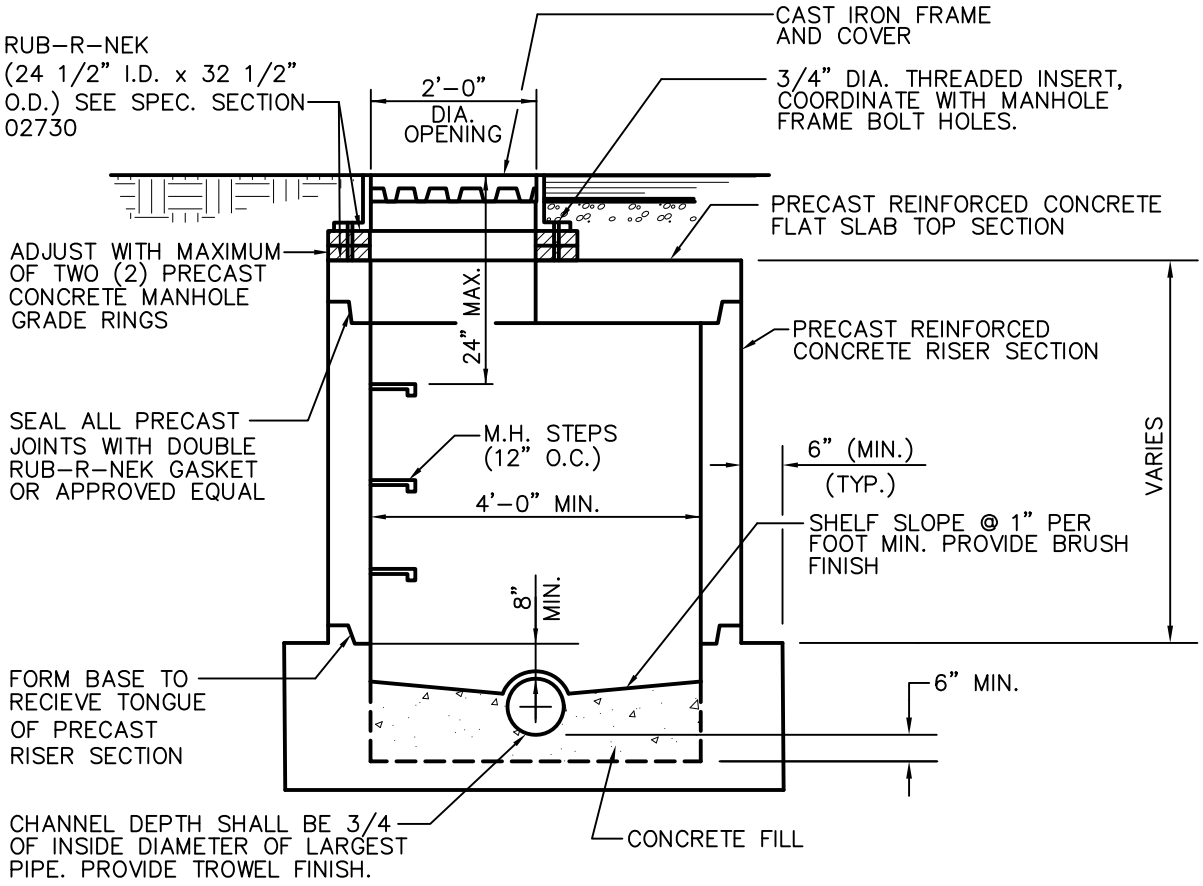

NOTES:

1. MECHANICALLY VIBRATED PRECAST CONCRETE, RISER AND TOP SHALL CONFORM TO A.S.T.M. SPEC. C–478.
2. MANHOLE SHALL HAVE 2 COATS BITUMASTIC COATING ON EXTERIOR (INCLUDING BOTTOM).
3. MAINTAIN POSITIVE GRADE THROUGH MANHOLE.
4. ALL OPENINGS AROUND PIPES SHALL BE FINISHED WITH NON–SHRINK GROUT.
5. CONTRACTOR MAY USE PRECAST INVERT BASES.
6. IF 3/4" DIA. THREADED INSERTS ARE NOT PROVIDED ON STRUCTURE. HOLES FOR THE THREADED INSERT SHALL BE SEALED WITH EPOXY.
7. FOR MANHOLES WITH SEWER LINES ENTERING AT GREATER THAN 10% SLOPES, INDIVIDUAL SHOP DRAWINGS MUST BE SUBMITTED BY THE CONTRACTOR AND REVIEWED BY THE ENGINEER.
8. INTERIOR OF MANHOLE SHALL HAVE PROTECTIVE PVC COATING IN ACCORDANCE WITH SPECIFICATIONS. SEE PLAN VIEW OF SANITARY SEWER LAYOUT FOR LOCATION OF PVC COATED MANHOLES.
9. MANHOLE CHANNELS, BENCH, AND ALL INTERIOR SURFACES SUBJECT TO CORROSION SHALL RECEIVE FACTORY APPLIED CORROSION RESISTANT COATING SHOP DRAWINGS SHALL BE SUBMITTED FOR COATING (FOR PVC COATED MANHOLES ONLY).

SHALLOW MANHOLE

NOT TO SCALE

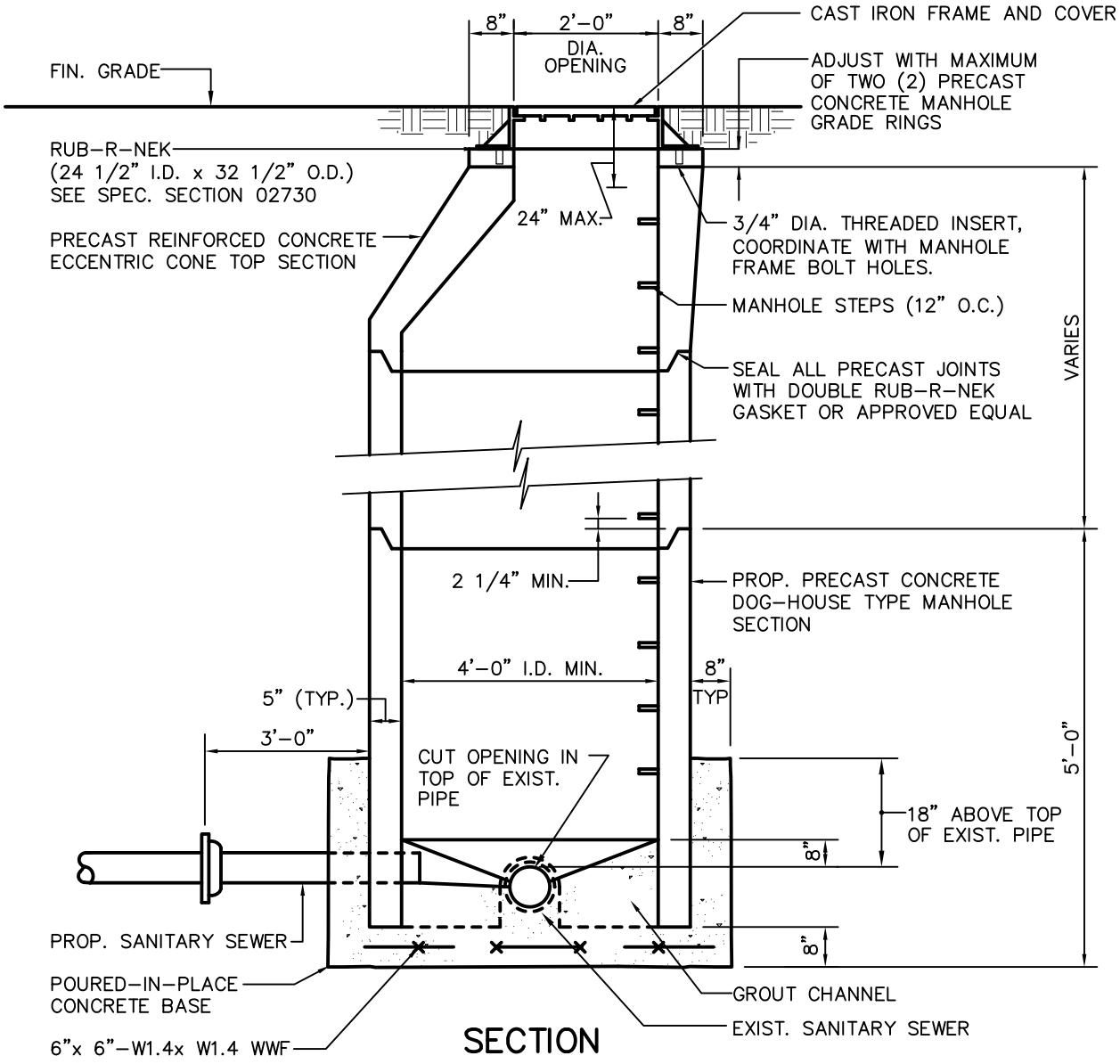

NOTES:

1. MECHANICALLY VIBRATED PRECAST CONCRETE, RISER AND TOP SHALL CONFORM TO A.S.T.M. SPEC. C-478.
2. MANHOLE SHALL HAVE 2 COATS BITUMASTIC COATING ON EXTERIOR (INCLUDING BOTTOM).
3. MAINTAIN POSITIVE GRADE THROUGH MANHOLE.
4. ALL OPENINGS AROUND PIPES SHALL BE FINISHED WITH NON-SHRINK GROUT.
5. CONTRACTOR MAY USE PRECAST INVERT BASES.
6. IF 3/4" DIA. THREADED INSERTS ARE NOT PROVIDED ON STRUCTURE. HOLES FOR THE THREADED INSERT SHALL BE SEALED WITH EPOXY.
7. FOR MANHOLES WITH SEWER LINES ENTERING AT GREATER THAN 10% SLOPES, INDIVIDUAL SHOP DRAWINGS MUST BE SUBMITTED BY THE CONTRACTOR AND REVIEWED BY THE ENGINEER.
8. INTERIOR OF MANHOLE SHALL HAVE PROTECTIVE PVC COATING IN ACCORDANCE WITH SPECIFICATIONS. SEE PLAN VIEW OF SANITARY SEWER LAYOUT FOR LOCATION OF PVC COATED MANHOLES.
9. MANHOLE CHANNELS, BENCH, AND ALL INTERIOR SURFACES SUBJECT TO CORROSION SHALL RECEIVE FACTORY APPLIED CORROSION RESISTANT COATING SHOP DRAWINGS SHALL BE SUBMITTED FOR COATING (FOR PVC COATED MANHOLES ONLY).

PRECAST CONCRETE MANHOLE (DOG-HOUSE TYPE)

NOT TO SCALE

NOTES:

1. MECHANICALLY VIBRATED PRECAST CONCRETE, RISER AND TOP SHALL CONFORM TO A.S.T.M. SPEC. C–478.
2. MANHOLE SHALL HAVE 2 COATS BITUMASTIC COATING ON EXTERIOR (INCLUDING BOTTOM).
3. ALL OPENINGS AROUND PIPES SHALL BE FINISHED WITH NON– SHRINK GROUT.
4. ALL MANHOLE FOOTINGS TO BE UNDISTURBED EARTH W/ CRUSHED AGGREGATE UP TO PIPE INVERTS. MANHOLES TO BE OPEN TO DRAIN.
5. INTERIOR OF MANHOLE SHALL HAVE PROTECTIVE PVC COATING IN ACCORDANCE WITH SPECIFICATIONS.
6. IF 3/4" DIA. THREADED INSERTS ARE NOT PROVIDED ON STRUCTURE. HOLES FOR THE THREADED INSERT SHALL BE SEALED WITH EPOXY.

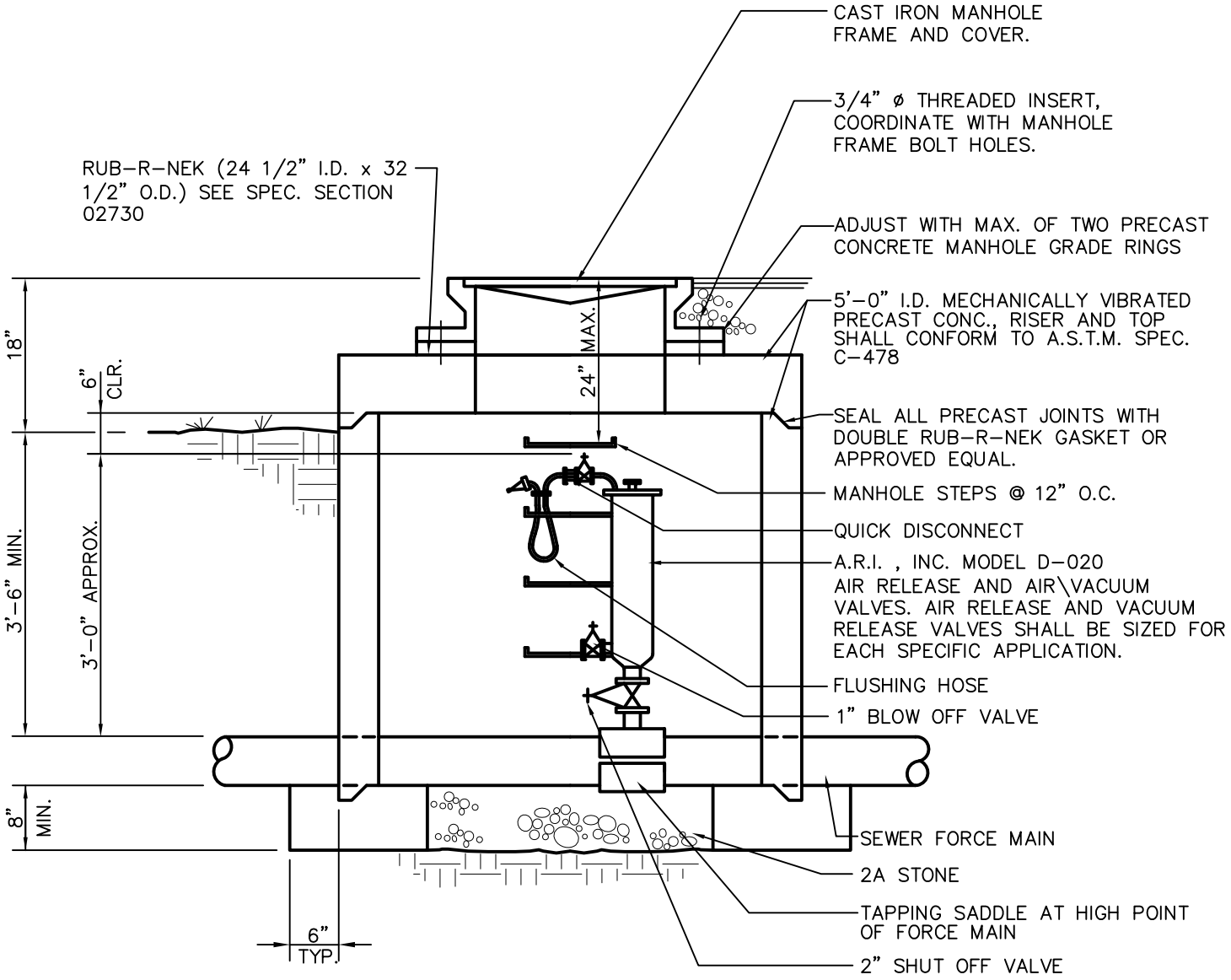

AIR RELEASE / VACUUM BREAK MANHOLE

NOT TO SCALE

NOTES:

1. MECHANICALLY VIBRATED PRECAST CONCRETE, RISER AND TOP SHALL CONFORM TO A.S.T.M. SPEC. C–478.
2. MANHOLE SHALL HAVE 2 COATS BITUMASTIC COATING ON EXTERIOR (INCLUDING BOTTOM).
3. ALL OPENINGS AROUND PIPES SHALL BE FINISHED WITH NON–SHRINK GROUT.
4. ALL MANHOLE FOOTINGS TO BE UNDISTURBED EARTH W/ CRUSHED AGGREGATE UP TO PIPE INVERTS. MANHOLES TO BE OPEN TO DRAIN.
5. INTERIOR OF MANHOLE SHALL HAVE PROTECTIVE PVC COATING IN ACCORDANCE WITH SPECIFICATIONS.
6. IF 3/4" DIA. THREADED INSERTS ARE NOT PROVIDED ON STRUCTURE. HOLES FOR THE THREADED INSERT SHALL BE SEALED WITH EPOXY.

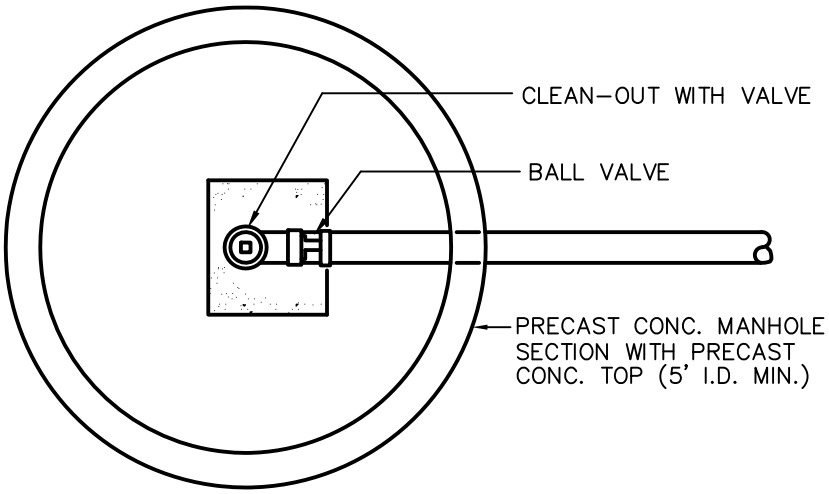

PLAN

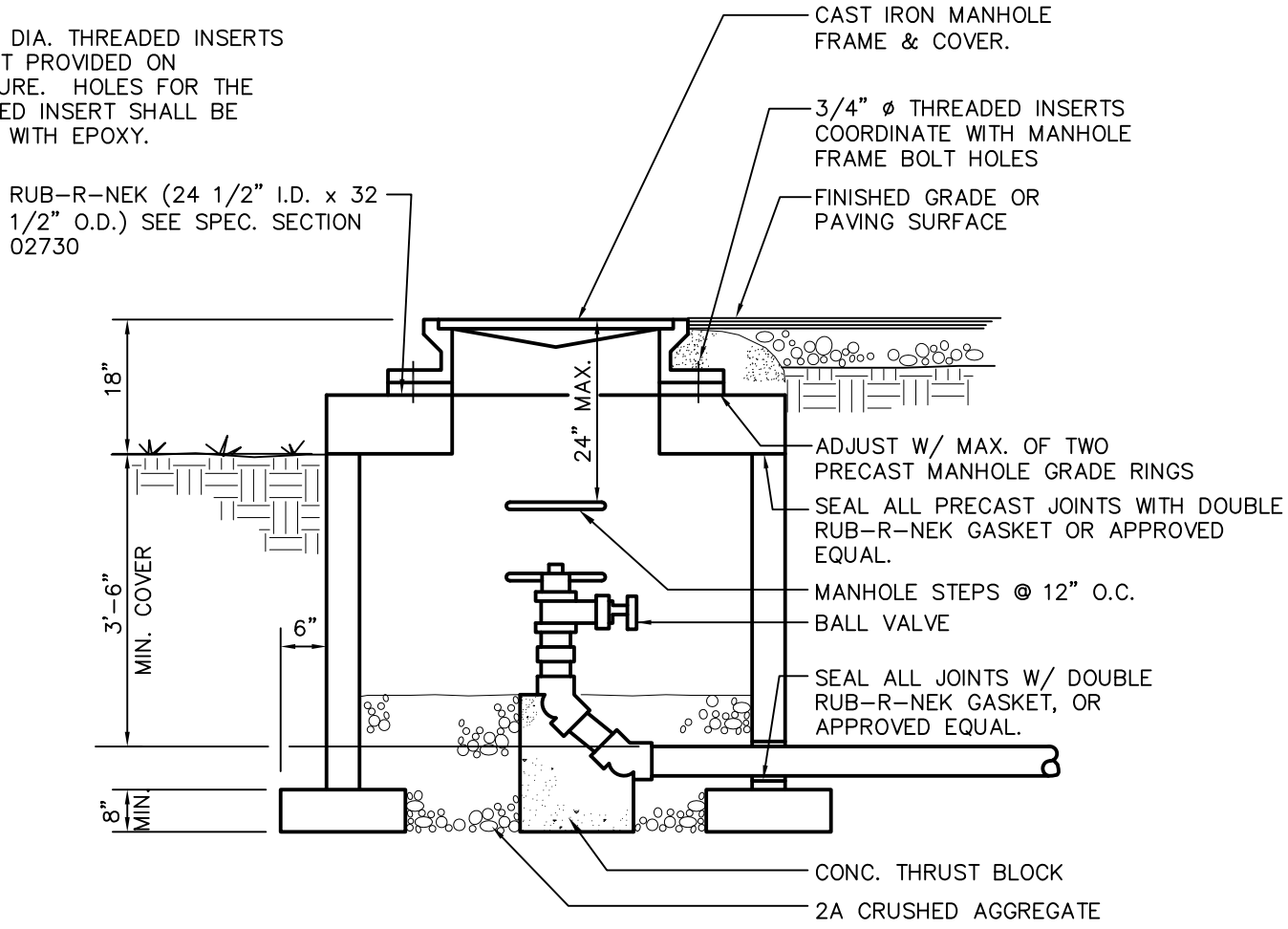

SECTION

TERMINAL CLEANOUT MANHOLE

NOT TO SCALE

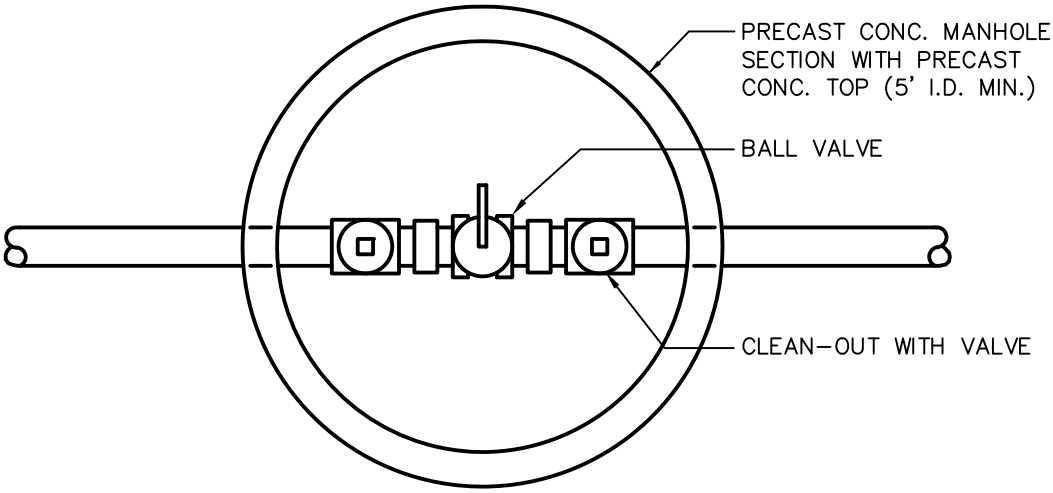

PLAN

NOTES:

1. MECHANICALLY VIBRATED PRECAST CONCRETE, RISER AND TOP SHALL CONFORM TO A.S.T.M. SPEC. C-478.
2. MANHOLE SHALL HAVE 2 COATS BITUMASTIC COATING ON EXTERIOR (INCLUDING BOTTOM).
3. ALL OPENINGS AROUND PIPES SHALL BE FINISHED WITH NON- SHRINK GROUT.
4. ALL MANHOLE FOOTINGS TO BE UNDISTURBED EARTH W/ CRUSHED AGGREGATE UP TO PIPE INVERTS. MANHOLES TO BE OPEN TO DRAIN.
5. INTERIOR OF MANHOLE SHALL HAVE PROTECTIVE PVC COATING IN ACCORDANCE WITH SPECIFICATIONS.
6. IF 3/4" DIA. THREADED INSERTS ARE NOT PROVIDED ON STRUCTURE. HOLES FOR THE THREADED INSERT SHALL BE SEALED WITH EPOXY.

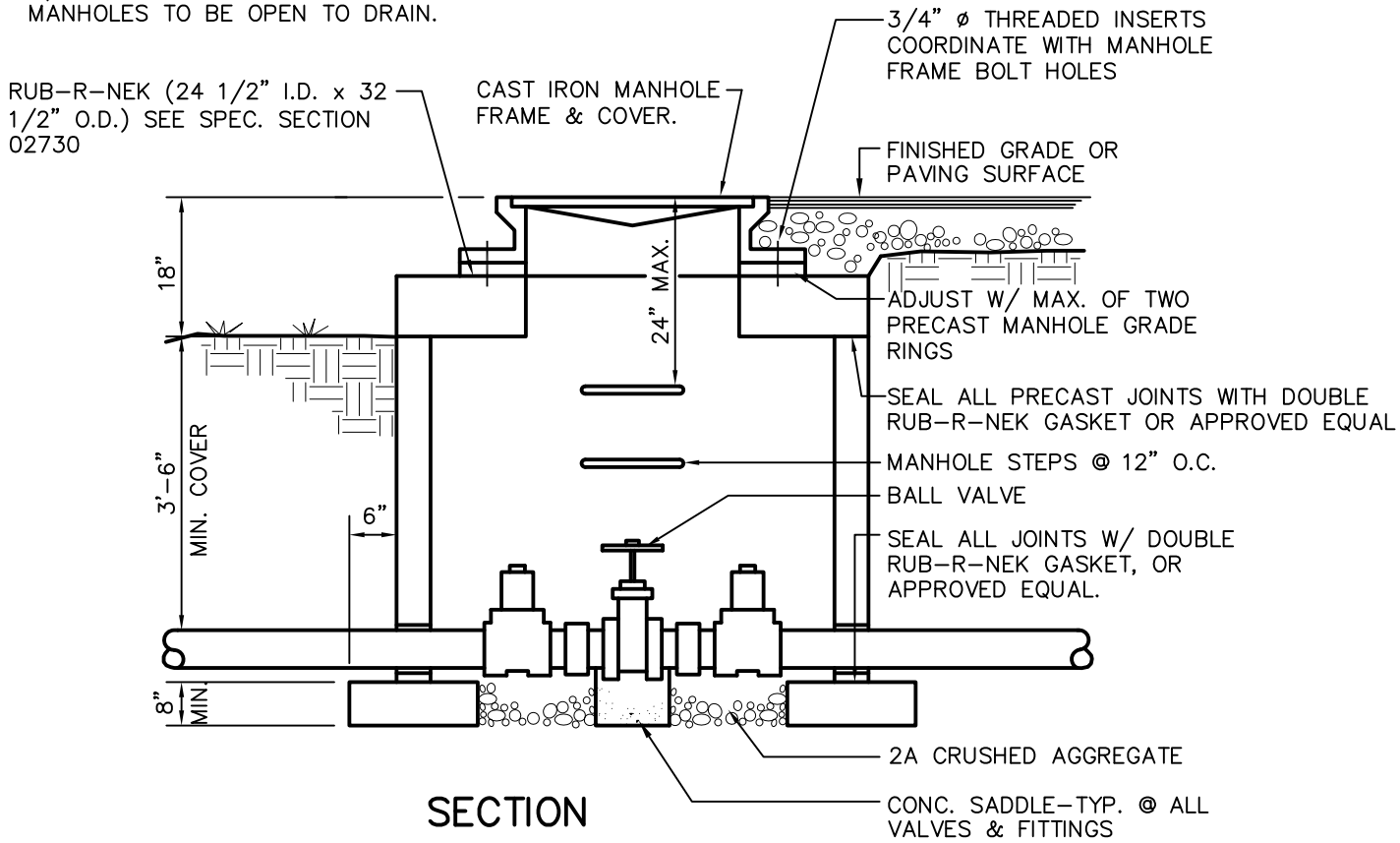

SECTION

VALVE & CLEANOUT MANHOLE TYPE 1

NOT TO SCALE

NOTE: TYPE 2 MANHOLE CONFIGURATION DEPENDS ON PIPE SIZES AND ARRANGEMENTS

1. PIPE SIZES 2", 2 1/2", AND 3" SHALL USE A 5' ø (MIN.) MANHOLE.
2. PIPE SIZES 4", 6", 8", AND 10" SHALL USE A 4' X 8' (MAX.) MANHOLE.
3. ANY PIPING ARRANGEMENT WITH PIPE SIZES LARGER THAN 3" SHALL REQUIRE A RECTANGULAR MANHOLE.

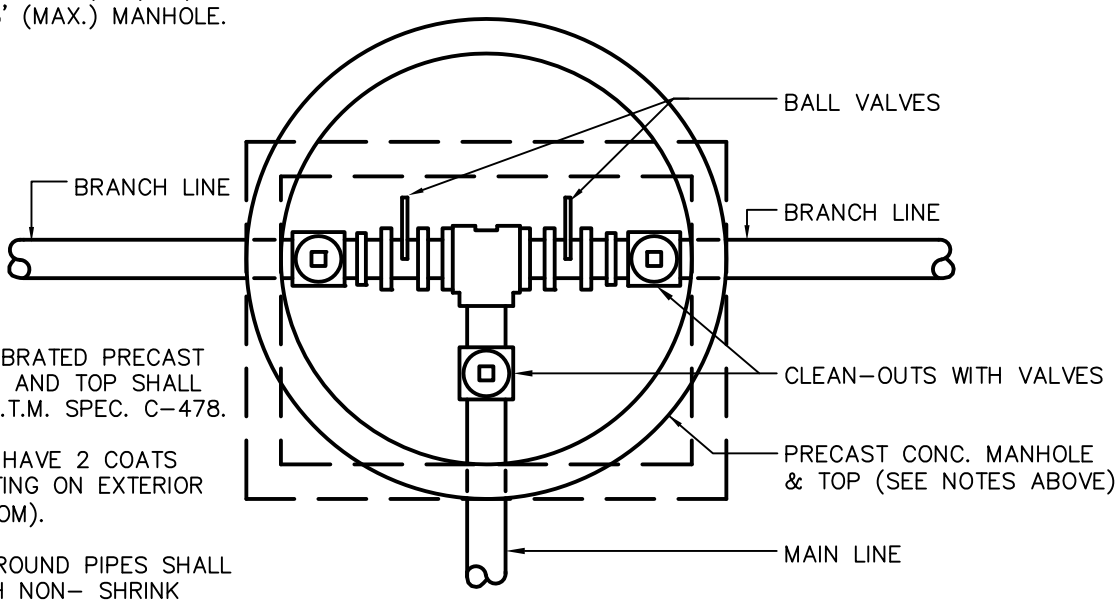

PLAN

NOTES:

1. MECHANICALLY VIBRATED PRECAST CONCRETE, RISER AND TOP SHALL CONFORM TO A.S.T.M. SPEC. C–478.
2. MANHOLE SHALL HAVE 2 COATS BITUMASTIC COATING ON EXTERIOR (INCLUDING BOTTOM).
3. ALL OPENINGS AROUND PIPES SHALL BE FINISHED WITH NON– SHRINK GROUT.
4. ALL MANHOLE FOOTINGS TO BE UNDISTURBED EARTH W/ CRUSHED AGGREGATE UP TO PIPE INVERTS. MANHOLES TO BE OPEN TO DRAIN.
5. INTERIOR OF MANHOLE SHALL HAVE PROTECTIVE PVC COATING IN ACCORDANCE WITH SPECIFICATIONS.
6. IF 3/4" DIA. THREADED INSERTS ARE NOT PROVIDED ON STRUCTURE. HOLES FOR THE THREADED INSERT SHALL BE SEALED WITH EPOXY.

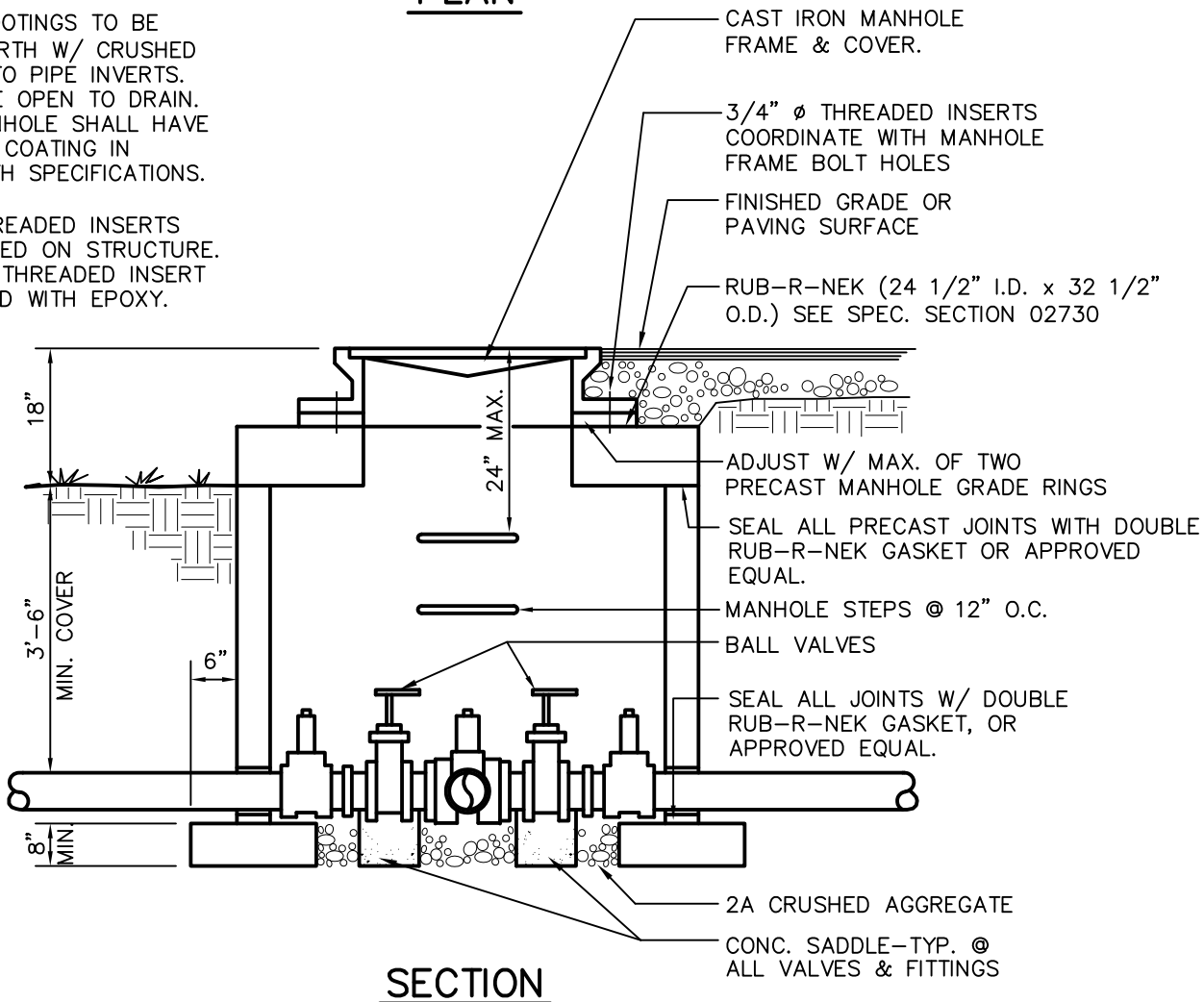

SECTION

VALVE & CLEANOUT MANHOLE TYPE 2

NOT TO SCALE

NOTE: TYPE 2 MANHOLE CONFIGURATION DEPENDS ON PIPE SIZES AND ARRANGEMENTS

1. PIPE SIZES 2", 2 1/2", AND 3" SHALL USE A 5' ø (MIN.) MANHOLE.
2. PIPE SIZES 4", 6", 8", AND 10" SHALL USE A 4' X 8' (MAX.) MANHOLE.
3. ANY PIPING ARRANGEMENT WITH PIPE SIZES LARGER THAN 3" SHALL REQUIRE A RECTANGULAR MANHOLE.

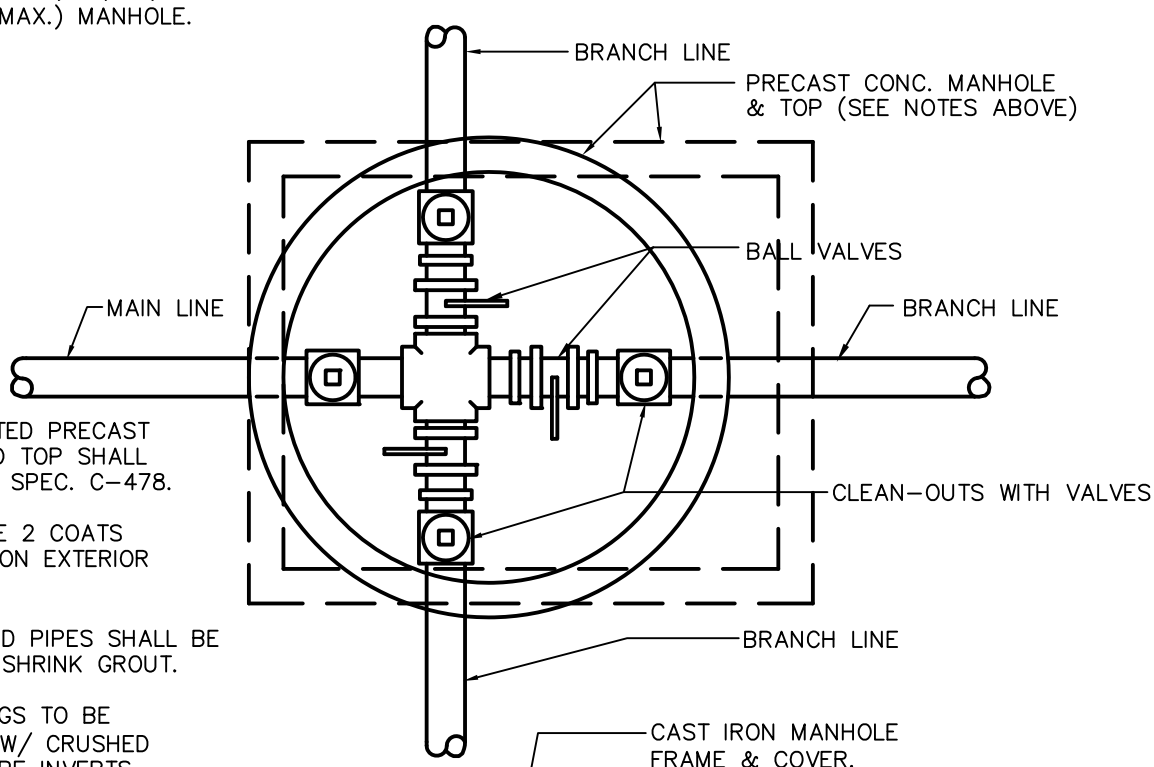

PLAN

NOTES:

1. MECHANICALLY VIBRATED PRECAST CONCRETE, RISER AND TOP SHALL CONFORM TO A.S.T.M. SPEC. C-478.
2. MANHOLE SHALL HAVE 2 COATS BITUMASTIC COATING ON EXTERIOR (INCLUDING BOTTOM).
3. ALL OPENINGS AROUND PIPES SHALL BE FINISHED WITH NON- SHRINK GROUT.
4. ALL MANHOLE FOOTINGS TO BE UNDISTURBED EARTH W/ CRUSHED AGGREGATE UP TO PIPE INVERTS. MANHOLES TO BE OPEN TO DRAIN.
5. INTERIOR OF MANHOLE SHALL HAVE PROTECTIVE PVC COATING IN ACCORDANCE WITH SPECIFICATIONS.
6. IF 3/4" DIA. THREADED INSERTS ARE NOT PROVIDED ON STRUCTURE. HOLES FOR THE THREADED INSERT SHALL BE SEALED WITH EPOXY.

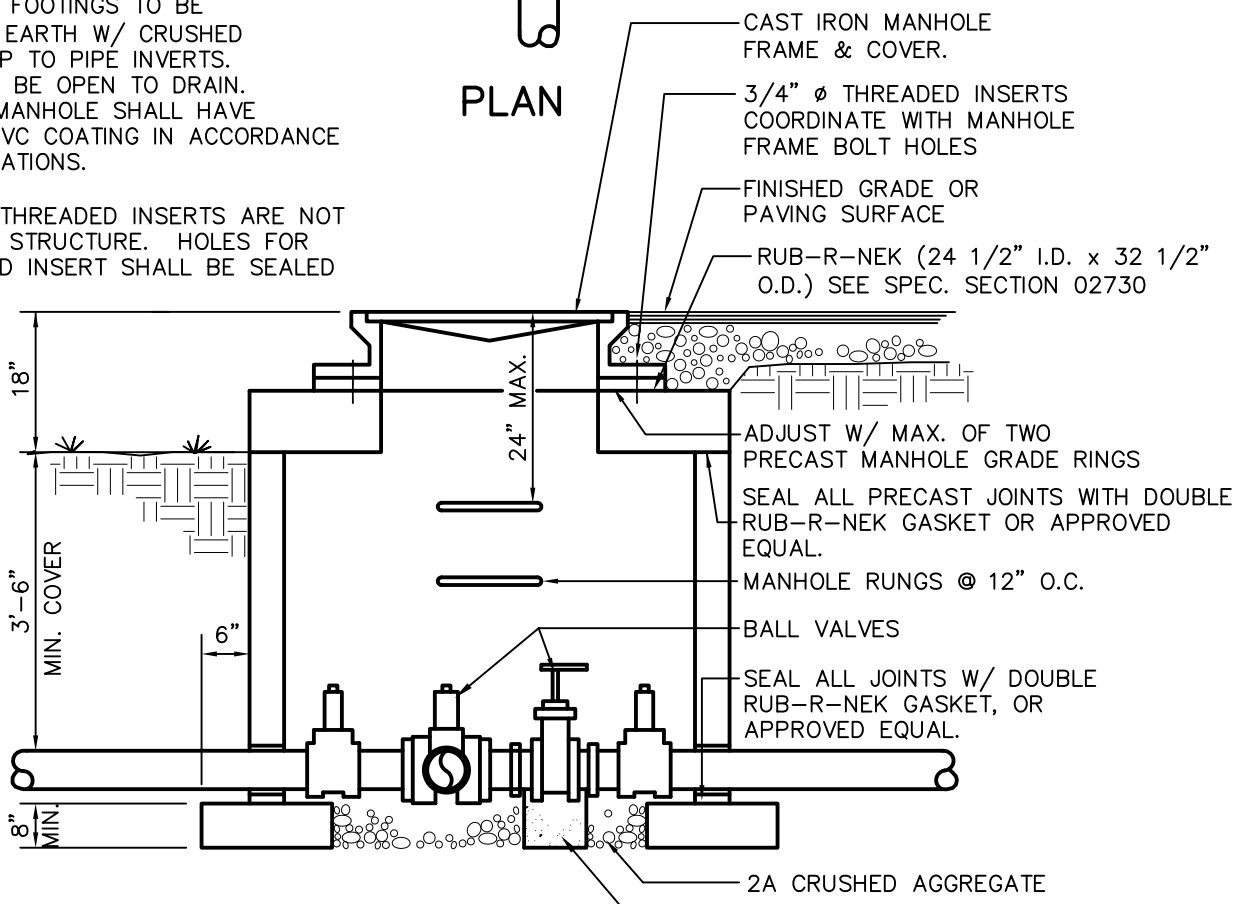

SECTION

VALVE & CLEANOUT MANHOLE TYPE 3

NOT TO SCALE

THIS PAGE INTENTIONALLY LEFT BLANK

THIS PAGE INTENTIONALLY LEFT BLANK

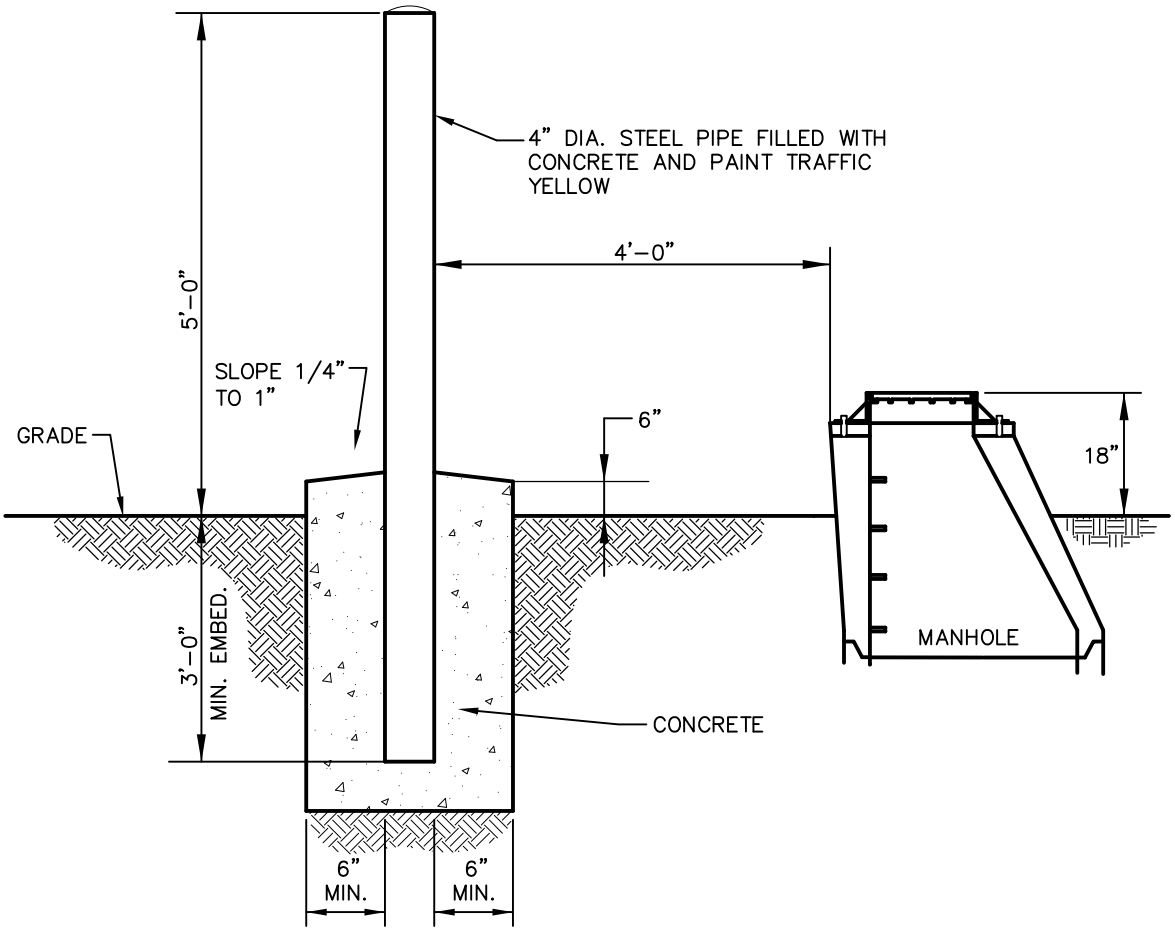

NOTES:

1. INSTALL IN FIELD AREAS OR ADJACENT TO PARKING AREAS.
2. INSTALL A TOTAL OF 4 POSTS AT EACH MANHOLE.

MANHOLE PROTECTION POSTS (FIELD AREAS)

NOT TO SCALE

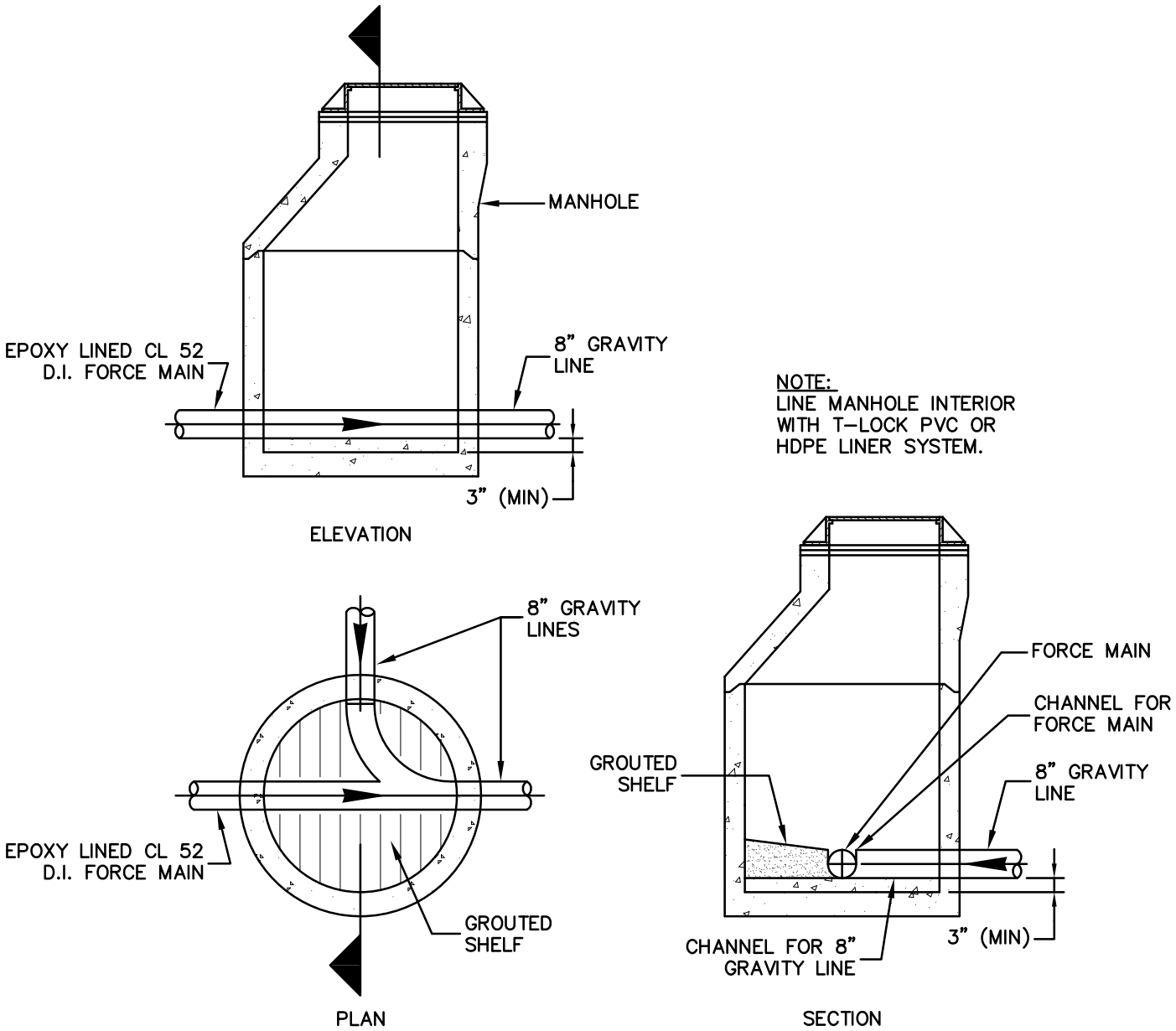

FORCE MAIN CONNECTION TO MANHOLE

NO SCALE

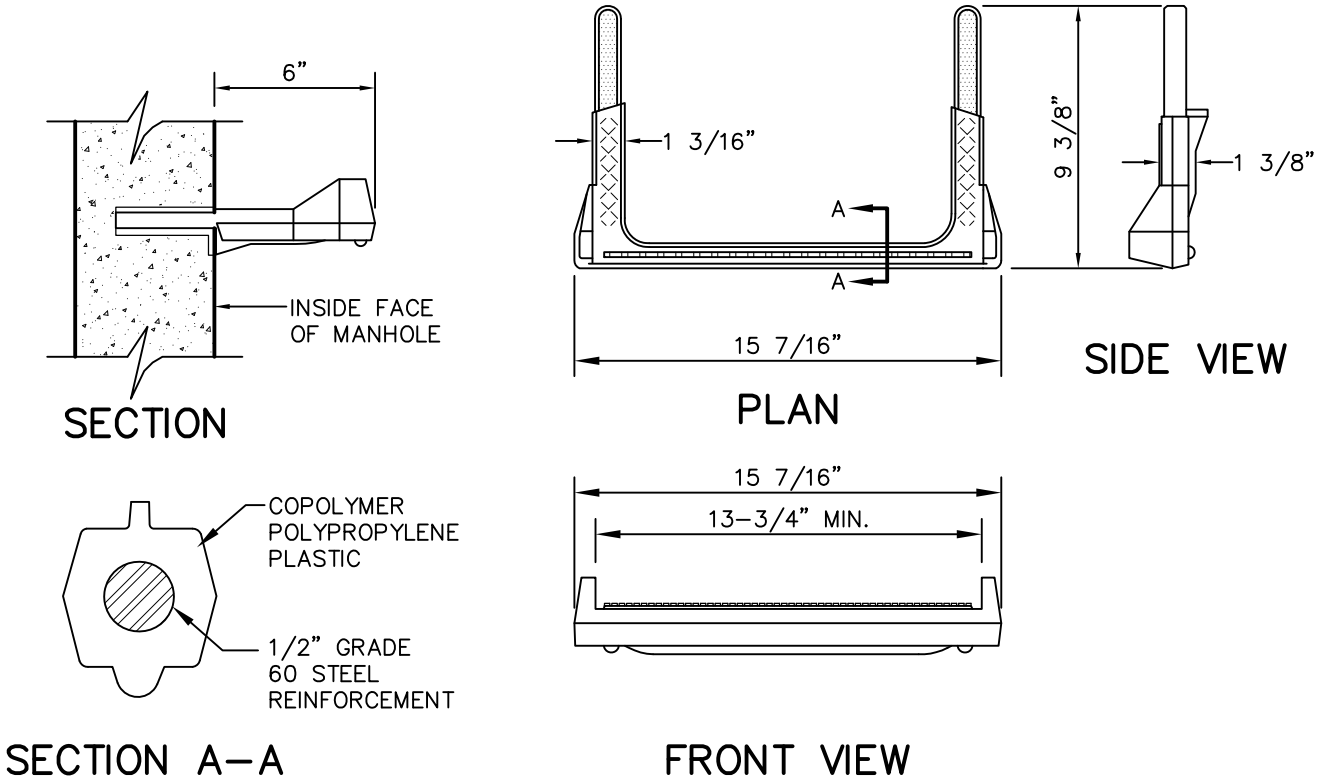

MANHOLE STEP

NOT TO SCALE

NOTES

1. ALL MANHOLE FRAME AND COVER DIMENSIONS SHALL BE CONSIDERED MINIMUM, UNLESS OTHERWISE NOTED, WITH THE EXCEPTION OF THE BOLT HOLE AND CORED HOLE DIMENSIONS.
2. ALL MANHOLE FRAMES AND COVERS SHALL BE FOR HEAVY DUTY TRAFFIC.
3. ALL COVERS SHALL BE SELF SEALING.

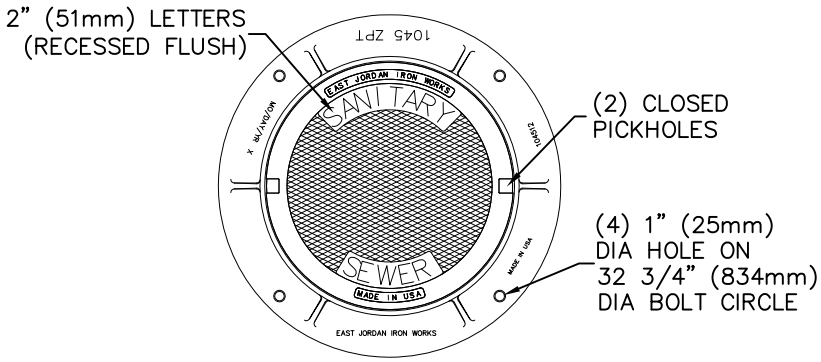

PLAN

COVER SECTION

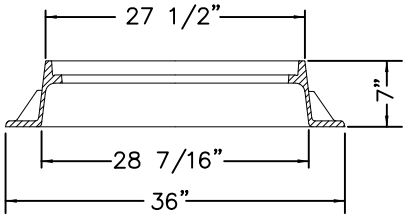

FRAME SECTION

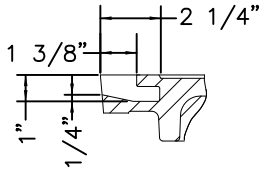

PICKHOLE DETAIL

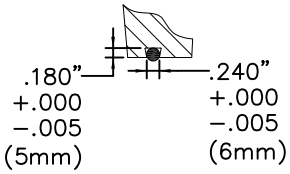

GROOVE DETAIL

STANDARD FRAME AND COVER

NOT TO SCALE

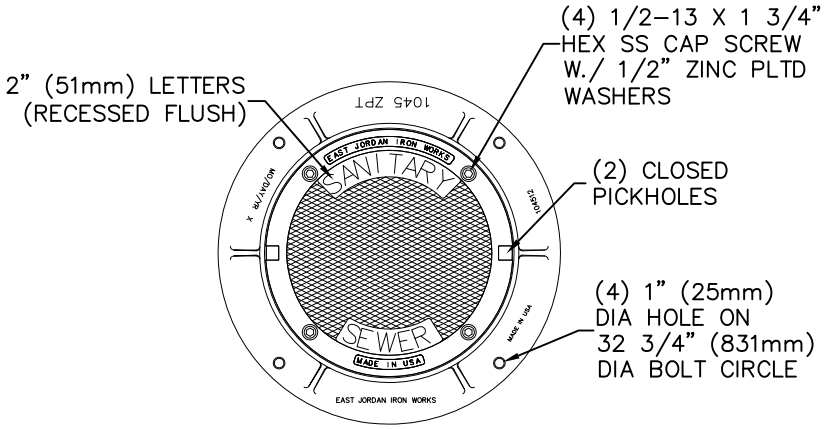

PLAN

NOTES

1. ALL MANHOLE FRAME AND COVER DIMENSIONS SHALL BE CONSIDERED MINIMUM, UNLESS OTHERWISE NOTED, WITH THE EXCEPTION OF THE BOLT HOLE AND CORED HOLE DIMENSIONS.
2. ALL MANHOLE FRAMES AND COVERS SHALL BE FOR HEAVY DUTY TRAFFIC
3. ALL COVERS SHALL BE SELF SEALING

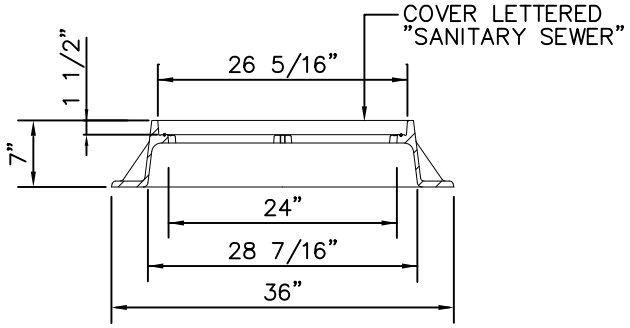

SECTION

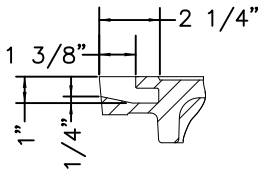

PICKHOLE DETAIL

WATERTIGHT FRAME AND COVER

NOT TO SCALE

NOTE:
PROVIDE 6" OF AASHTO NO. 8 (OR PennDOT NO. 1B) STONE BELOW PIPE AND 12" ABOVE ENTIRE LENGTH OF PIPE.

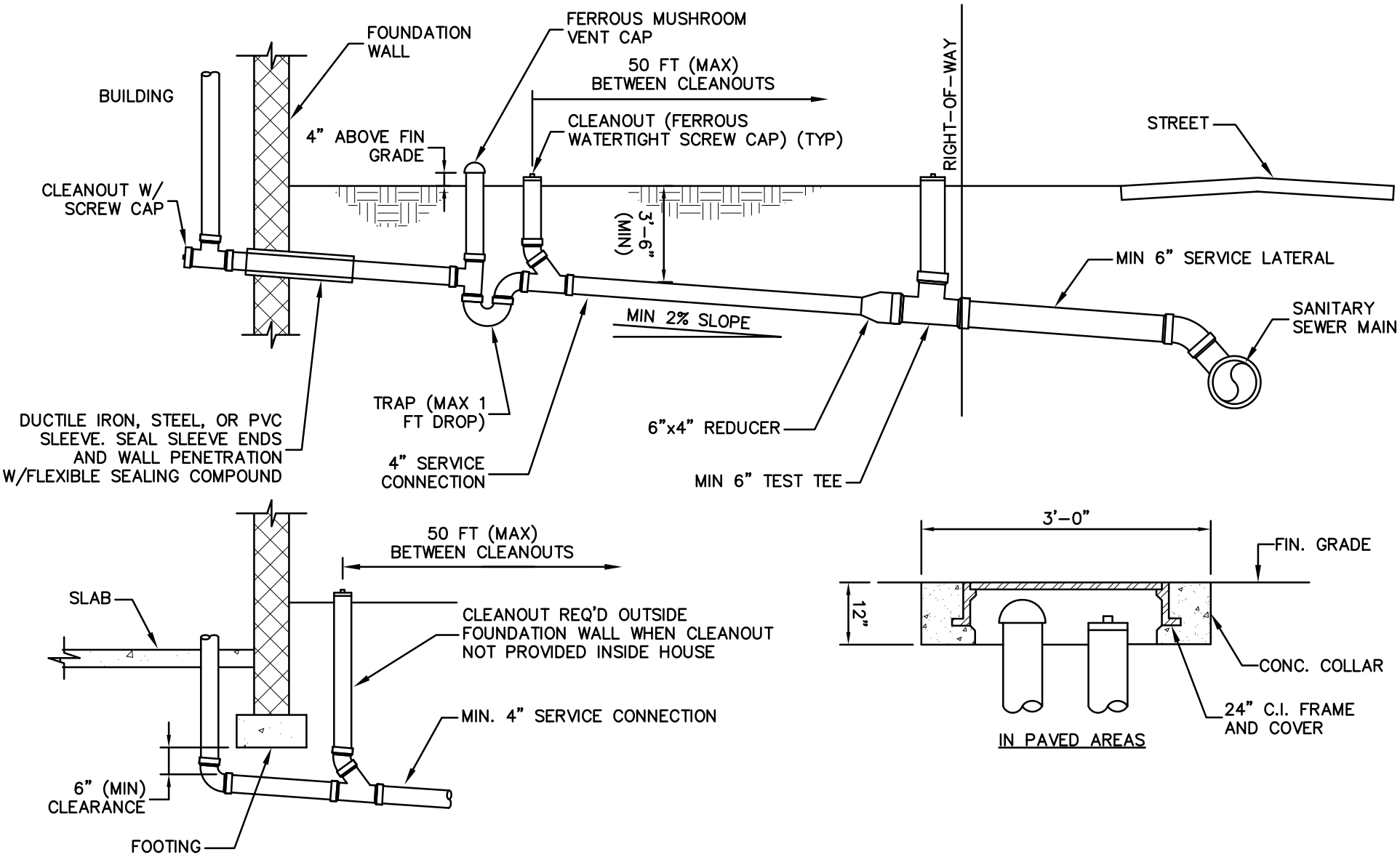

TYPICAL GRAVITY BUILDING SEWER CONNECTION

NO SCALE

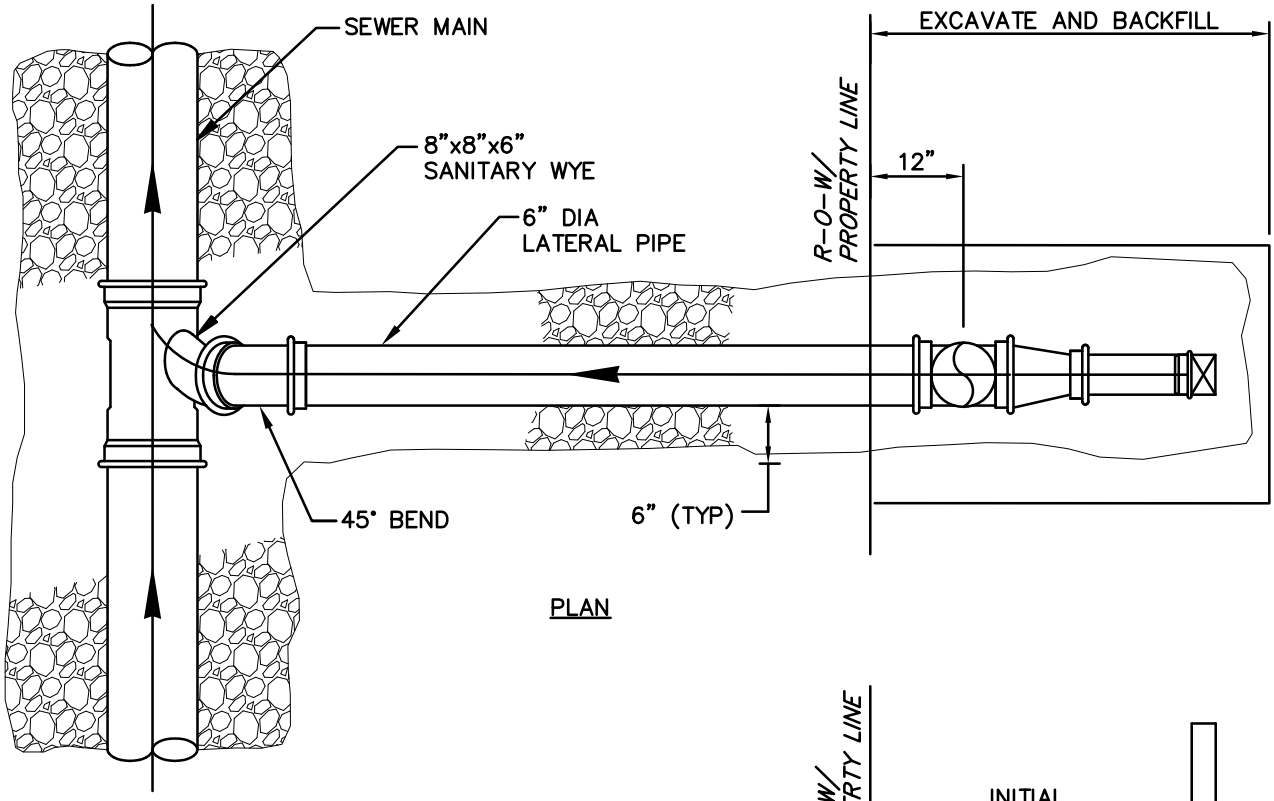

PLAN

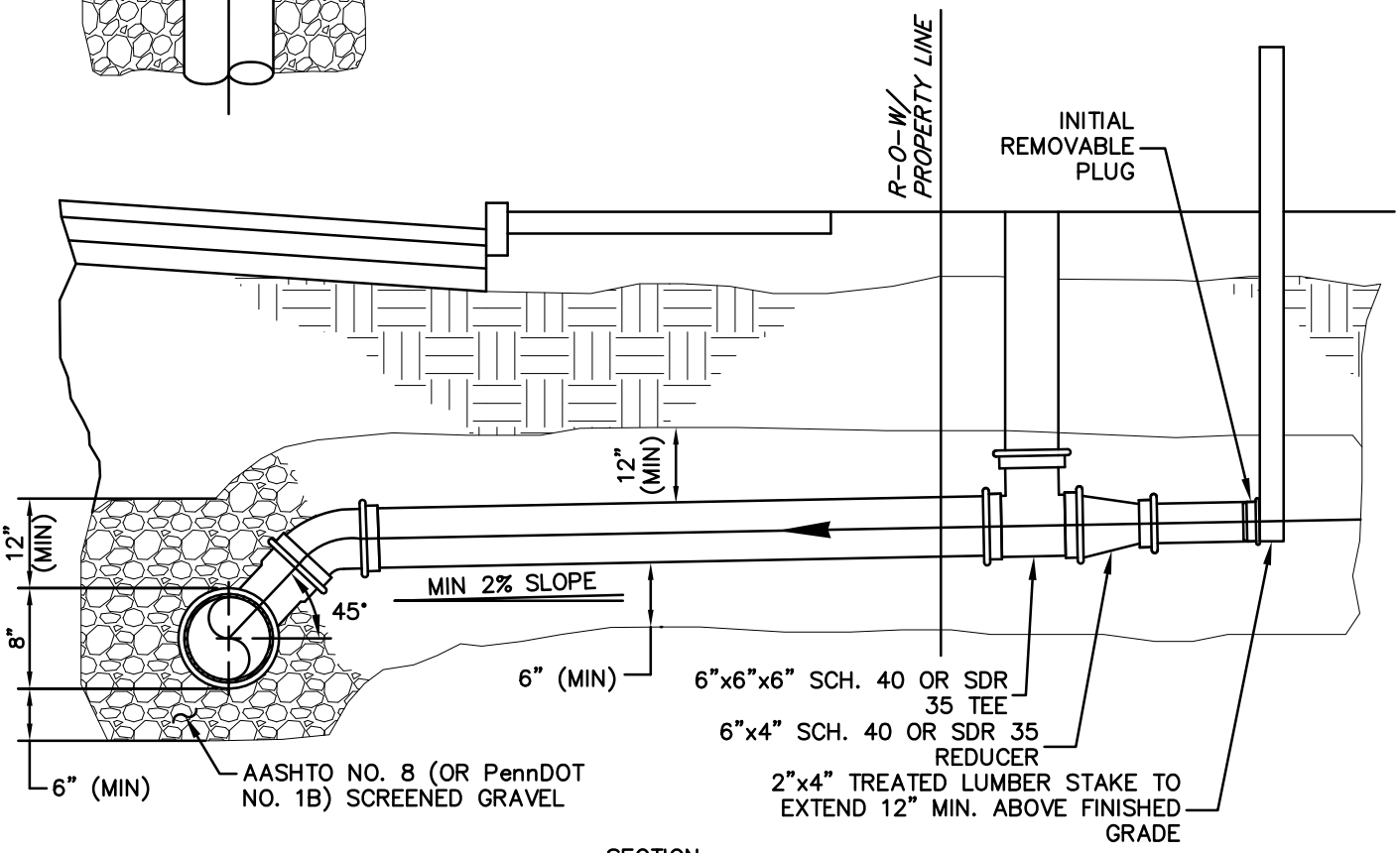

SECTION

SHALLOW SANITARY LATERAL

NO SCALE

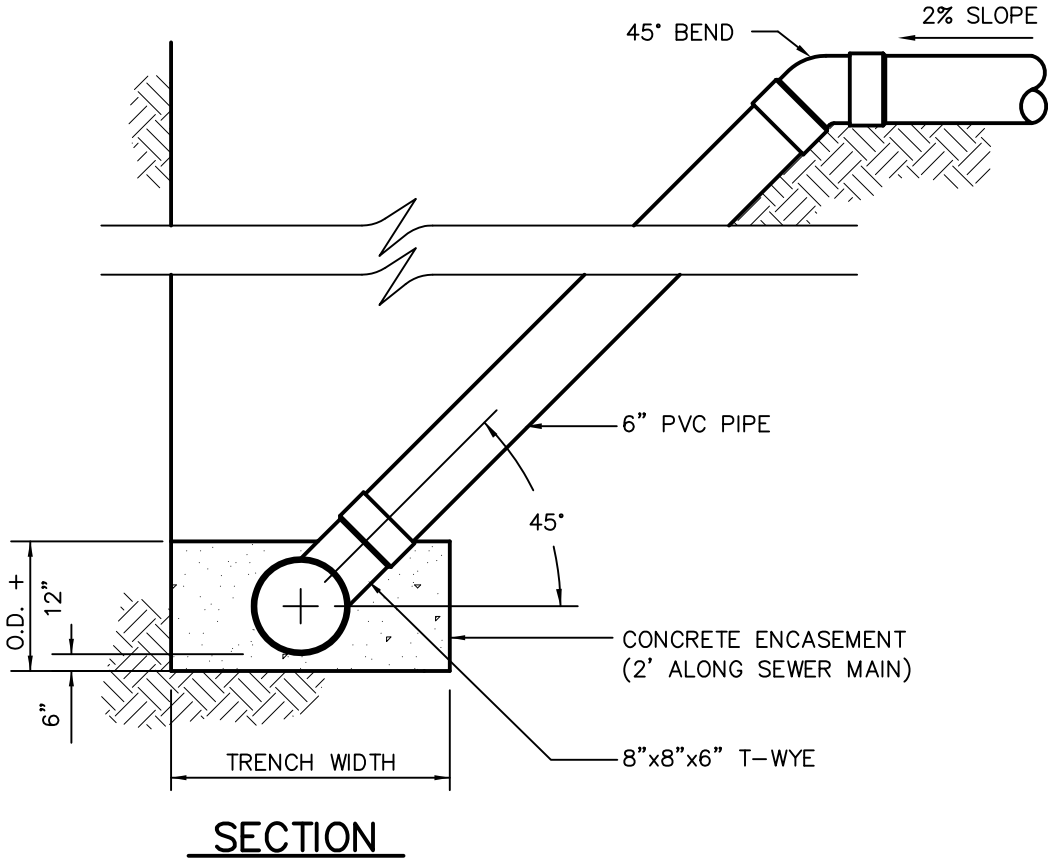

DEEP SANITARY SEWER LATERAL (12' AND DEEPER)

NOT TO SCALE

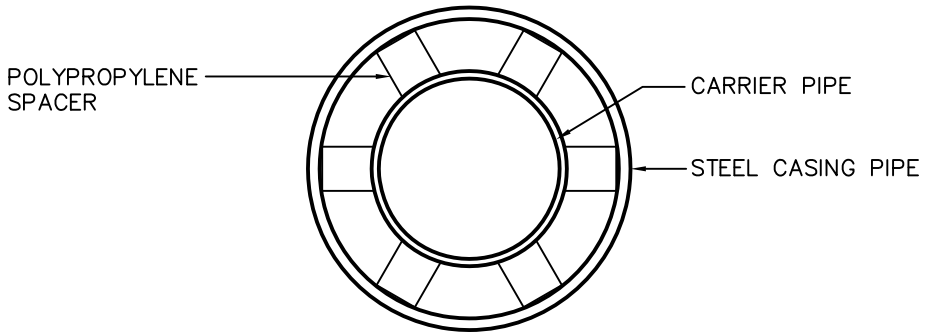

SECTION

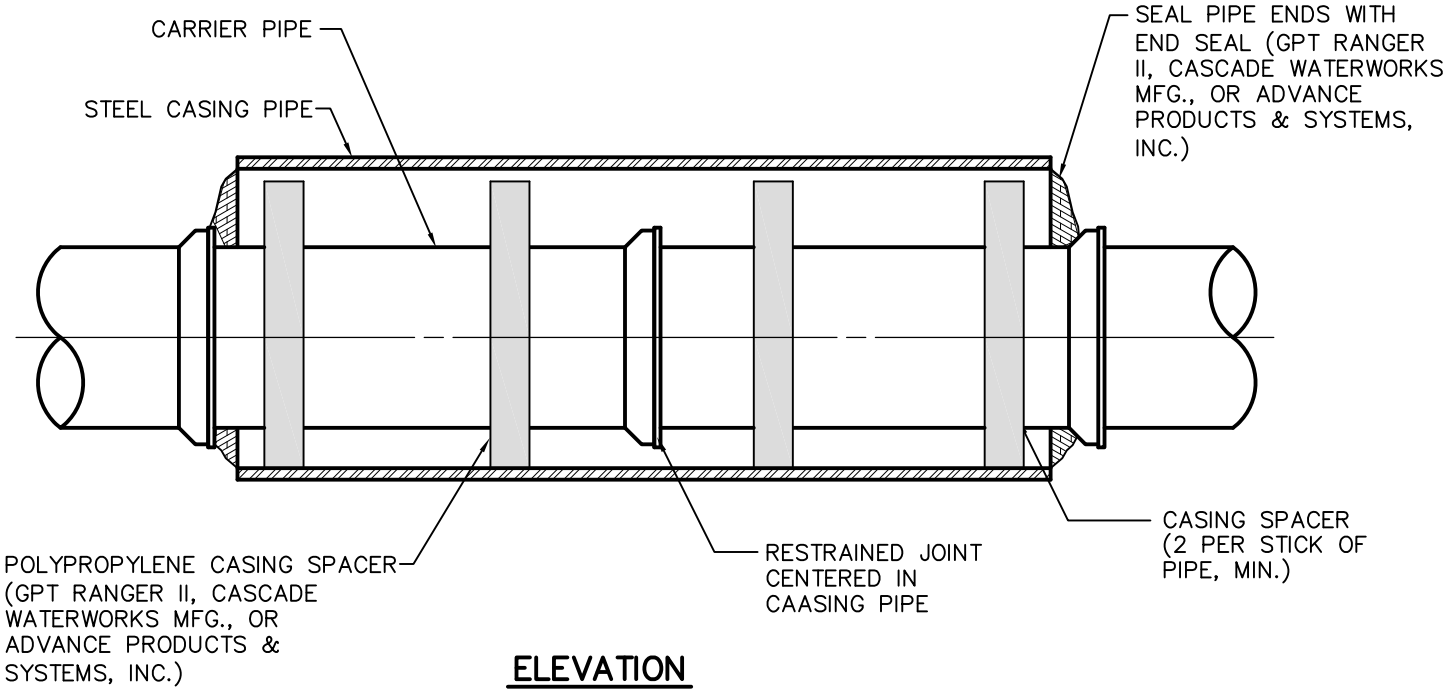

ELEVATION

CASING AND CRADLE

NOT TO SCALE

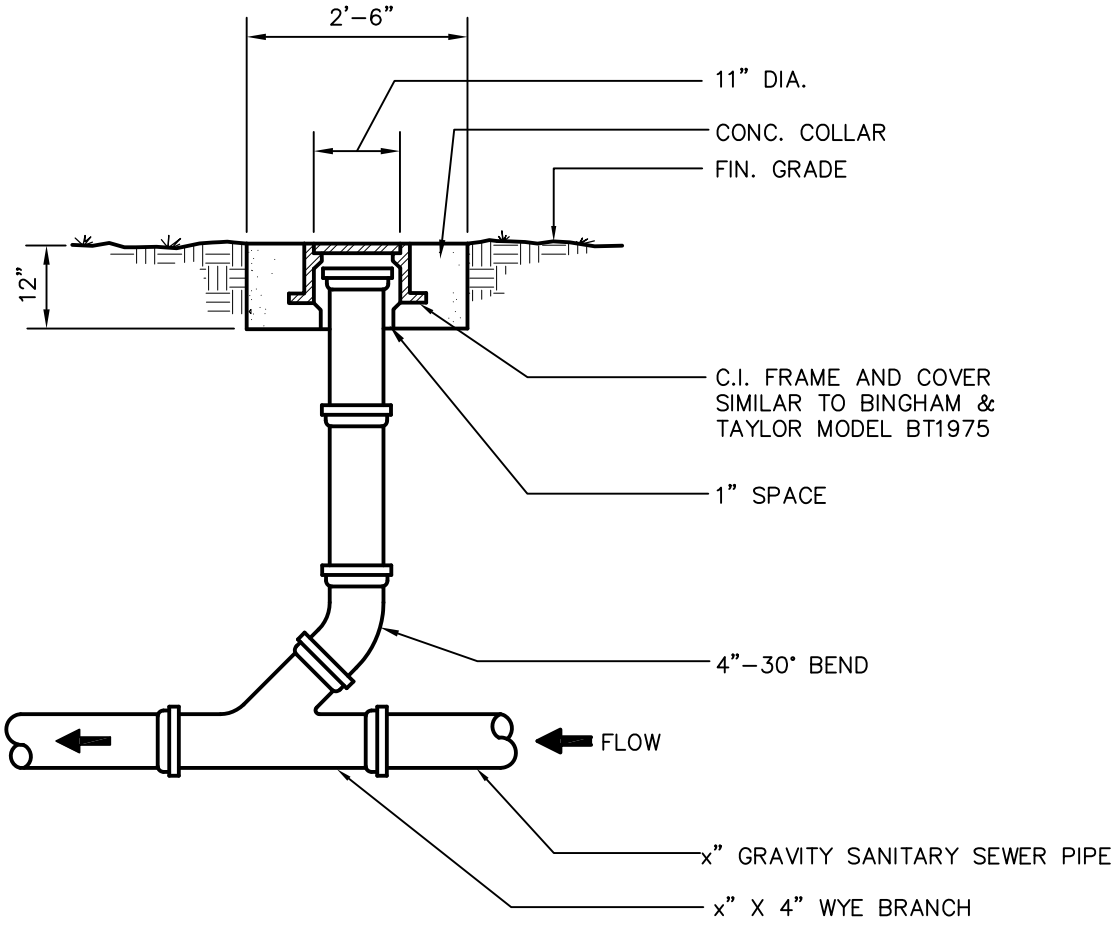

CLEANOUT

NOT TO SCALE

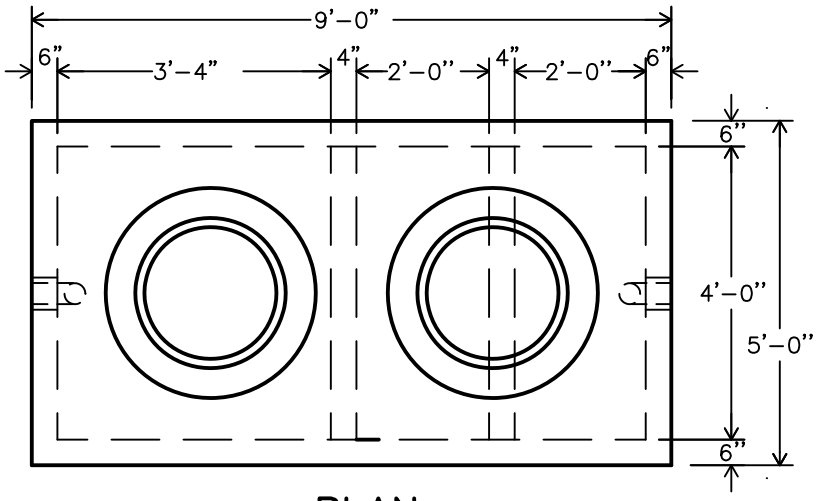

—PLAN—

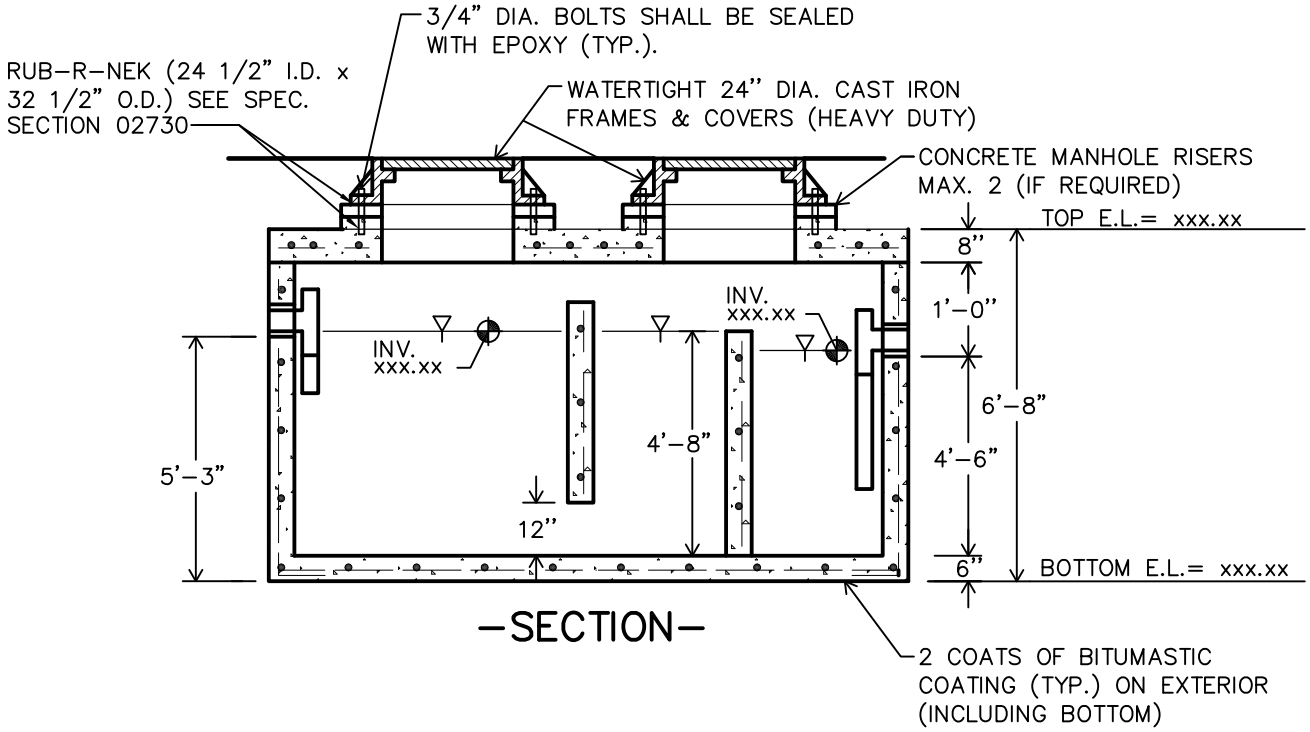

—SECTION—

1000 GALLON GREASE INTERCEPTOR

NOT TO SCALE

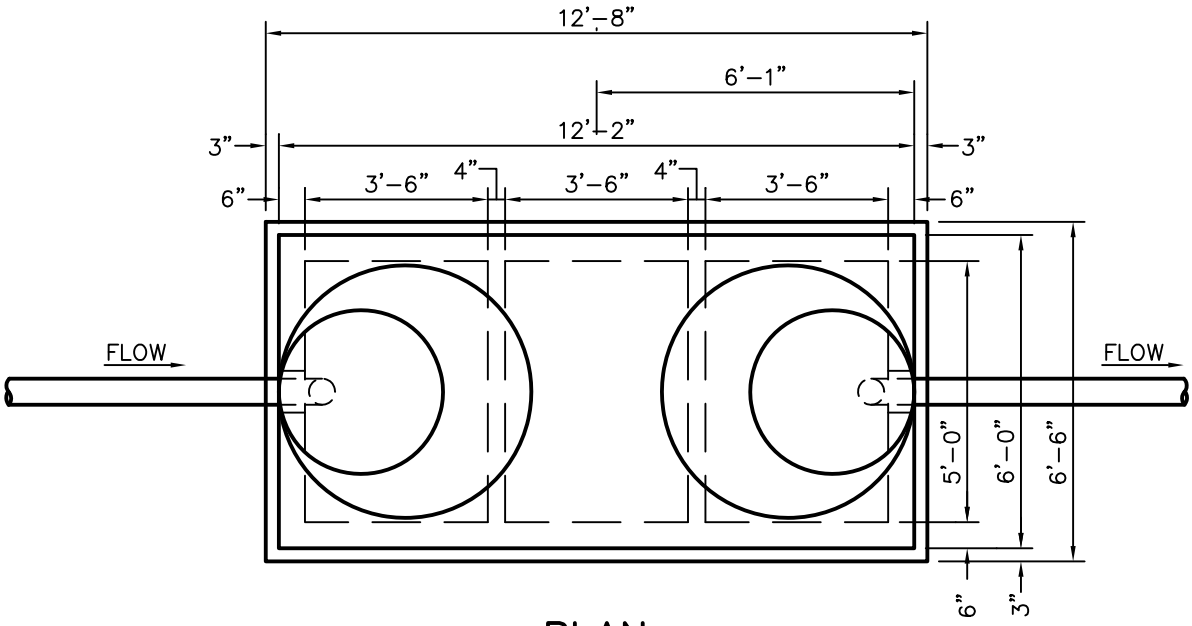

PLAN

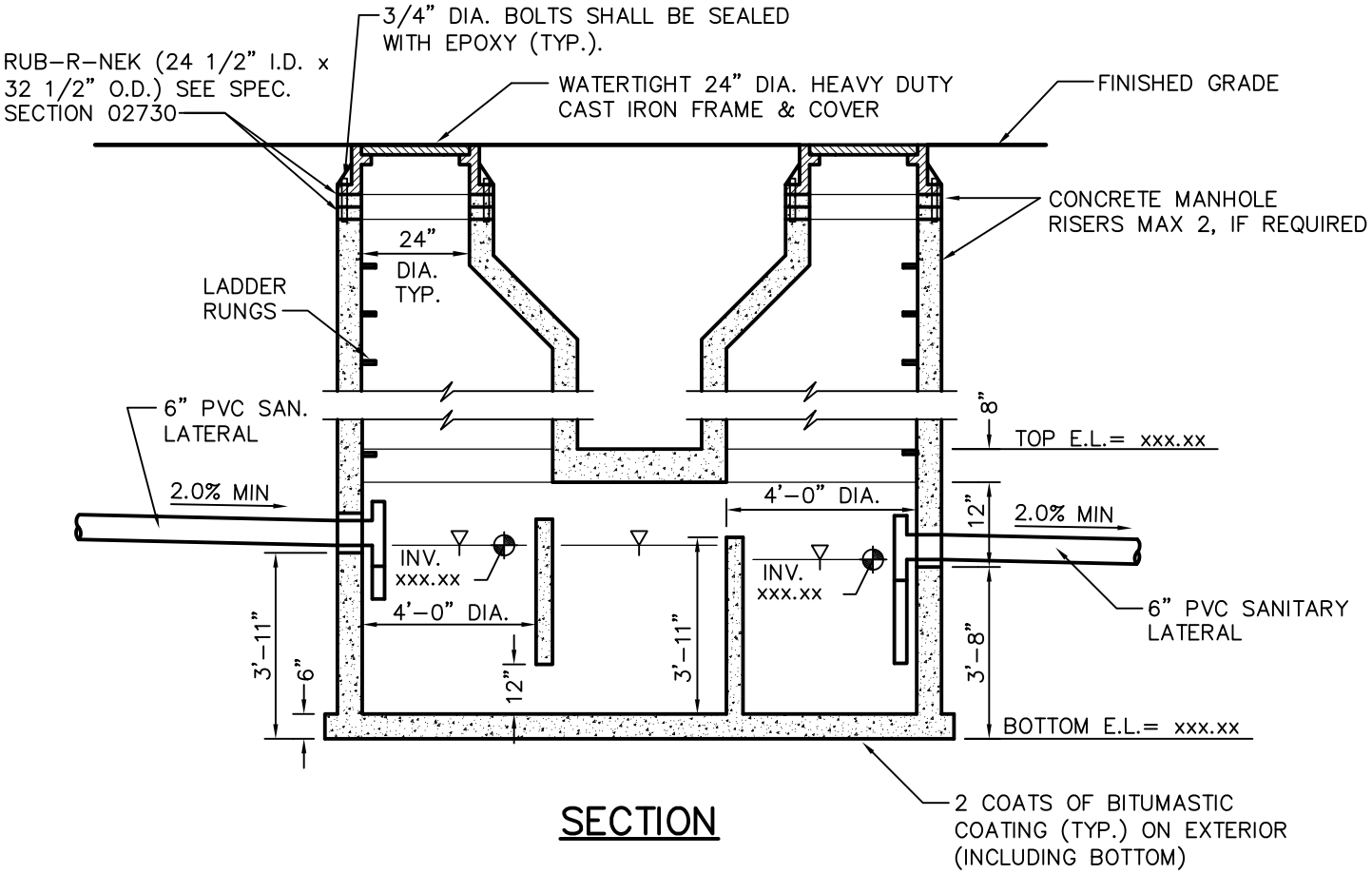

SECTION

1500 GALLON GREASE INTERCEPTOR

NOT TO SCALE

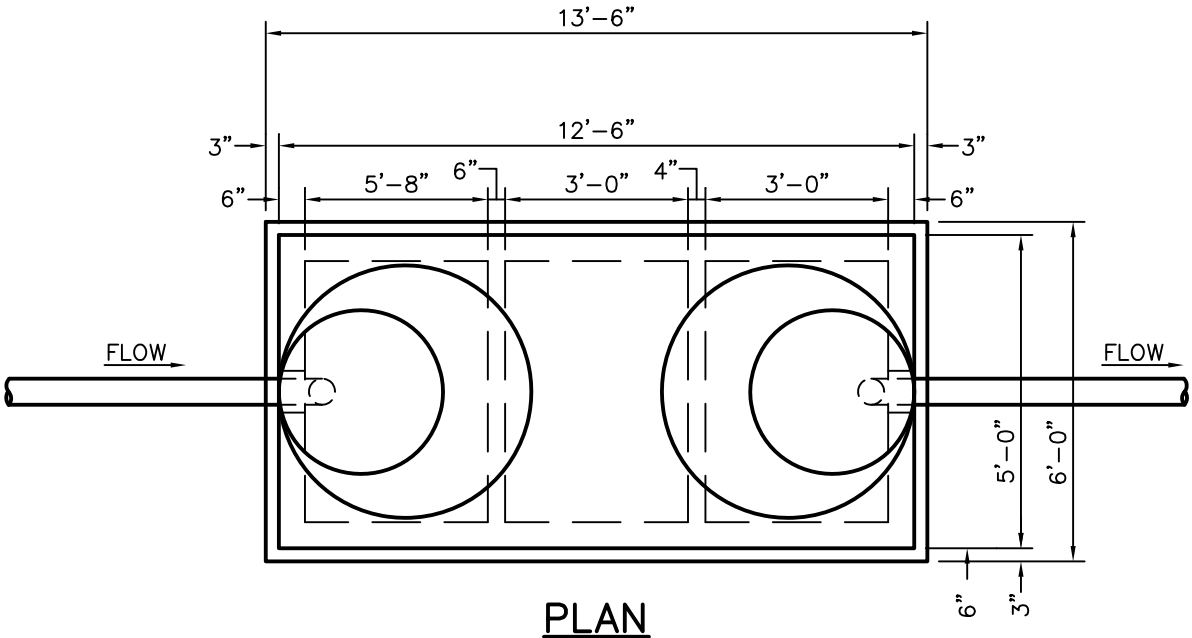

PLAN

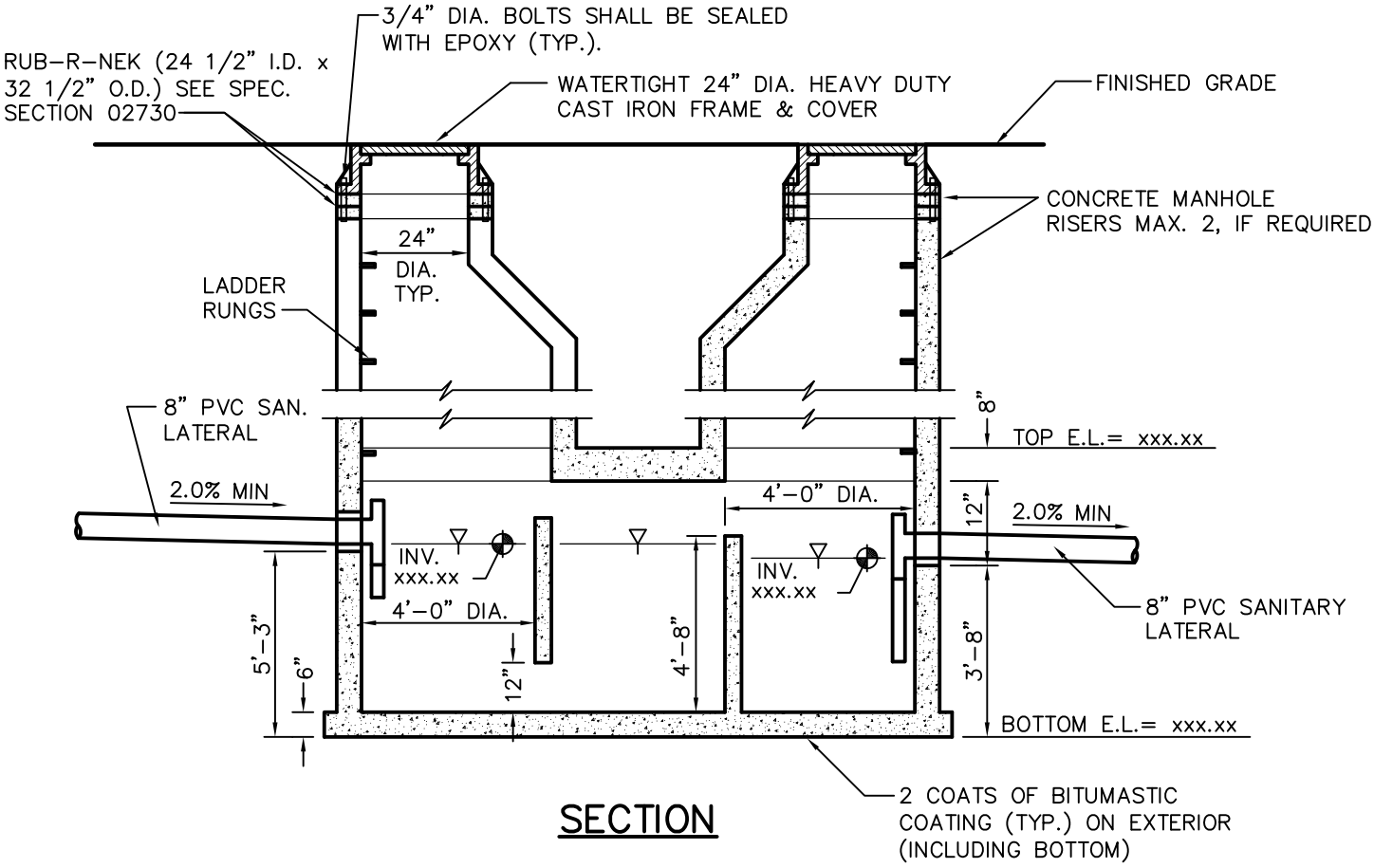

SECTION

2000 GALLON GREASE INTERCEPTOR

NOT TO SCALE

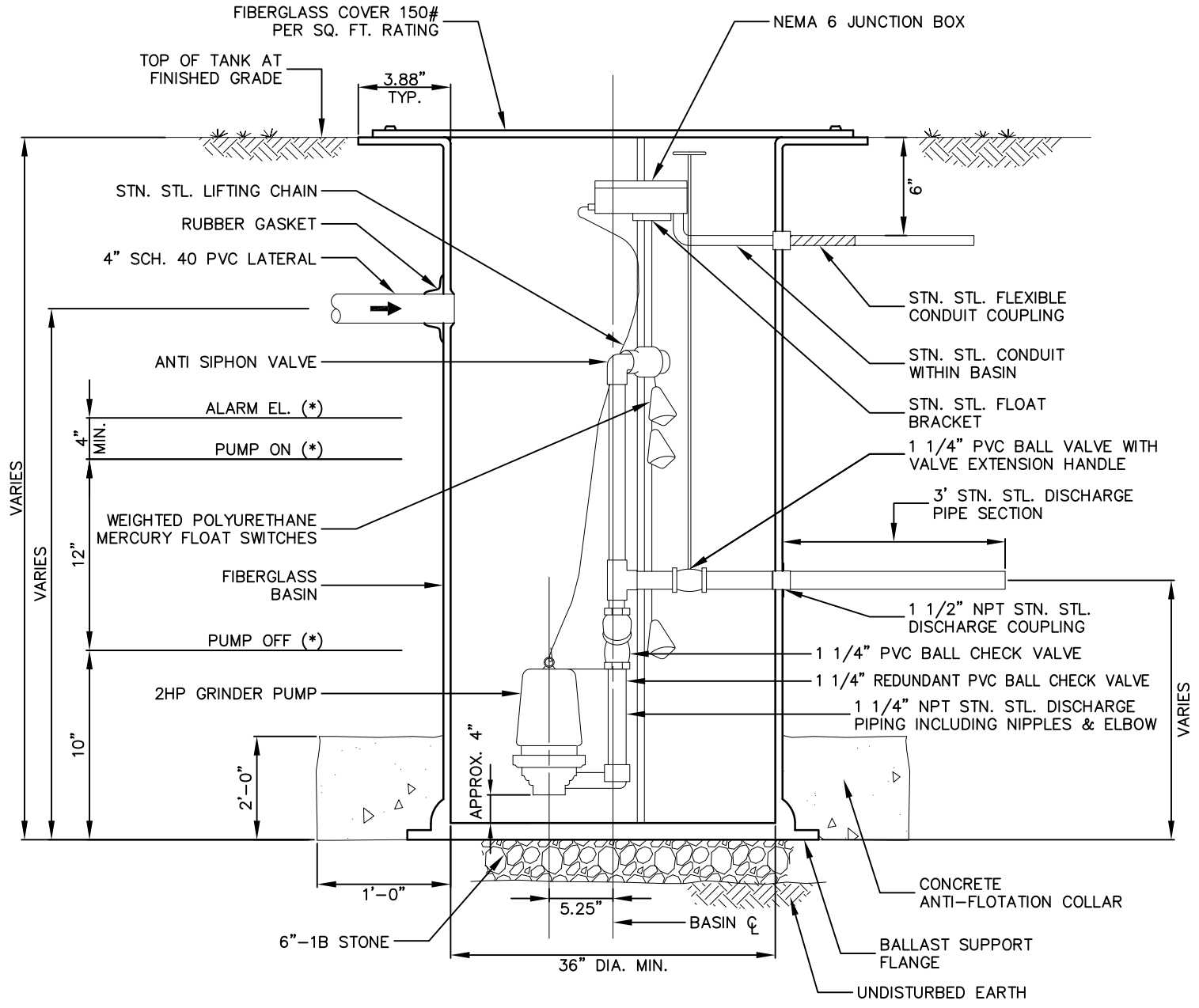

SECTION

NOTE:
* ELEVATIONS PER SITE CONDITIONS.

SIMPLEX GRINDER PUMP STATION
FIBERGLASS BASIN - SECTION

NO SCALE

NOTES:

1. CONTRACTOR SHALL PROVIDE A MINIMUM 3' SECTION OF 1 1/2" STAINLESS STEEL DISCHARGE PIPING OUTSIDE OF BASIN. THE 1 1/2" STAINLESS STEEL PIPE SHALL BE CONNECTED TO THE 1 1/2" PVC SERVICE LATERAL BY USE OF A COMPRESSION FITTING OR DRESSER COUPLING.

2. BACKFILL WITH EXCAVATED MATERIAL APPROVED BY THE ENGINEER & CONTAINING NO SOIL LUMPS, STONE, CONCRETE OR FOREIGN OBJECTS LARGER THAN ONE (1) INCH IN MAXIMUM DIMENSION OR WITH CLASS 1S MATERIAL CONSISTING OF NO. 8 COARSE AGGREGATE TO 6" BELOW GRADE; THEN TOPSOIL & SEED TOP 6".

3. MINIMUM NET EFFECTIVE STORAGE VOLUME BETWEEN PUMP SHUT-OFF ELEVATION & INVERT OF INFLUENT LINE SHALL BE 50 GALLONS.

4. ALL COVER & ACCESS HARDWARE SHALL BE STAINLESS STEEL INCLUDING ALL NUTS, BOLTS, WASHERS, ETC. WHICH PENETRATE THE COVER OR THE BASIN.

5. ALL CONTROL PANEL EXTERIOR HARDWARE SHALL BE STAINLESS STEEL.

6. FIBERGLASS BASINS MAY NOT BE USED IN AREAS SUBJECT TO TRAFFIC LOADING.

7. LOCATION OF BASIN TO BE DETERMINED BY PROPERTY OWNER.

8. FINISHED GRADE SHALL BE SLOPED AWAY FROM THE BASIN TOP.

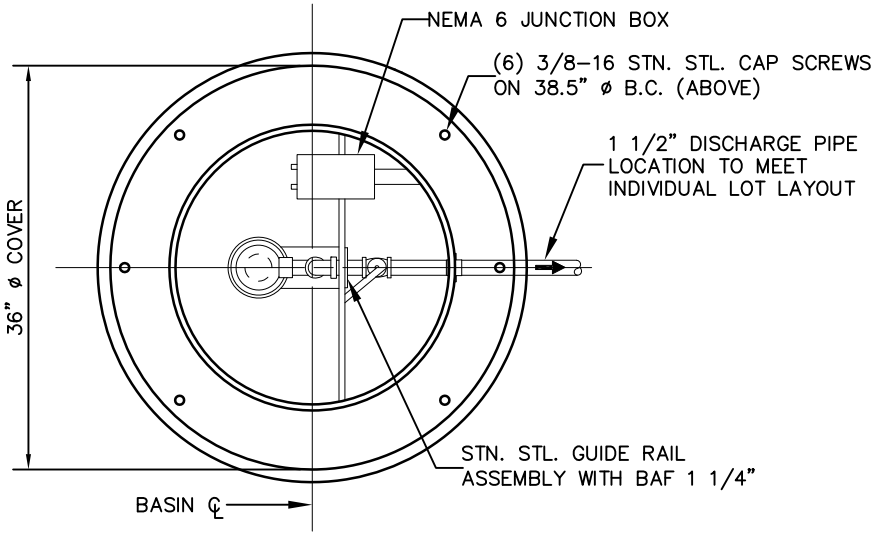

PLAN

SIMPLEX GRINDER PUMP STATION FIBERGLASS BASIN - PLAN

NO SCALE

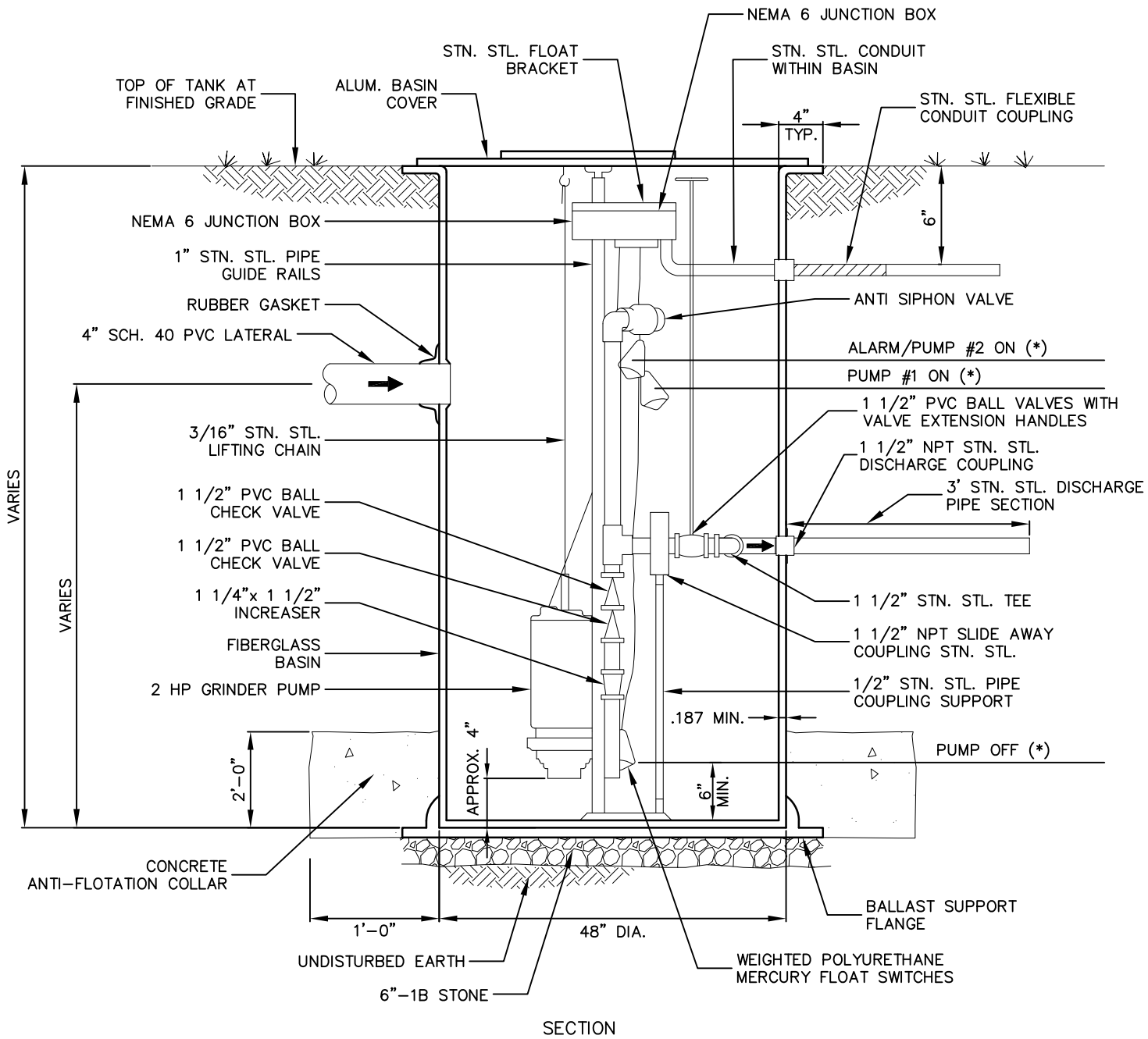

SECTION

NOTE:
* ELEVATIONS PER SITE CONDITIONS.

DUPLEX GRINDER PUMP STATION
FIBERGLASS BASIN - SECTION

NO SCALE

NOTES:

1. CONTRACTOR SHALL PROVIDE A MINIMUM 3' SECTION OF 1 1/2" STAINLESS STEEL DISCHARGE PIPING OUTSIDE OF BASIN. THE 1 1/2" STAINLESS STEEL PIPE SHALL BE CONNECTED TO THE 1 1/2" PVC SERVICE LATERAL BY USE OF A COMPRESSION FITTING OR DRESSER COUPLING.

2. BACKFILL WITH EXCAVATED MATERIAL APPROVED BY THE ENGINEER & CONTAINING NO SOIL LUMPS, STONE, CONCRETE OR FOREIGN OBJECTS LARGER THAN ONE (1) INCH IN MAXIMUM DIMENSION OR WITH CLASS 1S MATERIAL CONSISTING OF NO. 8 COARSE AGGREGATE TO 6" BELOW GRADE; THEN TOPSOIL & SEED TOP 6".

3. MINIMUM NET EFFECTIVE STORAGE VOLUME BETWEEN PUMP SHUT-OFF ELEVATION & INVERT OF INFLUENT LINE SHALL BE 250 GALLONS OR 24 HOURS OF STORAGE VOLUME, WHICHEVER IS GREATER.

4. ALL COVER & ACCESS HARDWARE SHALL BE STAINLESS STEEL INCLUDING ALL NUTS, BOLTS, WASHERS, ETC. WHICH PENETRATE THE COVER OR THE BASIN.

5. ALL CONTROL PANEL EXTERIOR HARDWARE SHALL BE STAINLESS STEEL.

6. FIBERGLASS BASINS MAY NOT BE USED IN AREAS SUBJECT TO TRAFFIC LOADING.

7. LOCATION OF BASIN TO BE DETERMINED BY PROPERTY OWNER.

8. FINISHED GRADE SHALL BE SLOPED AWAY FROM THE BASIN TOP.

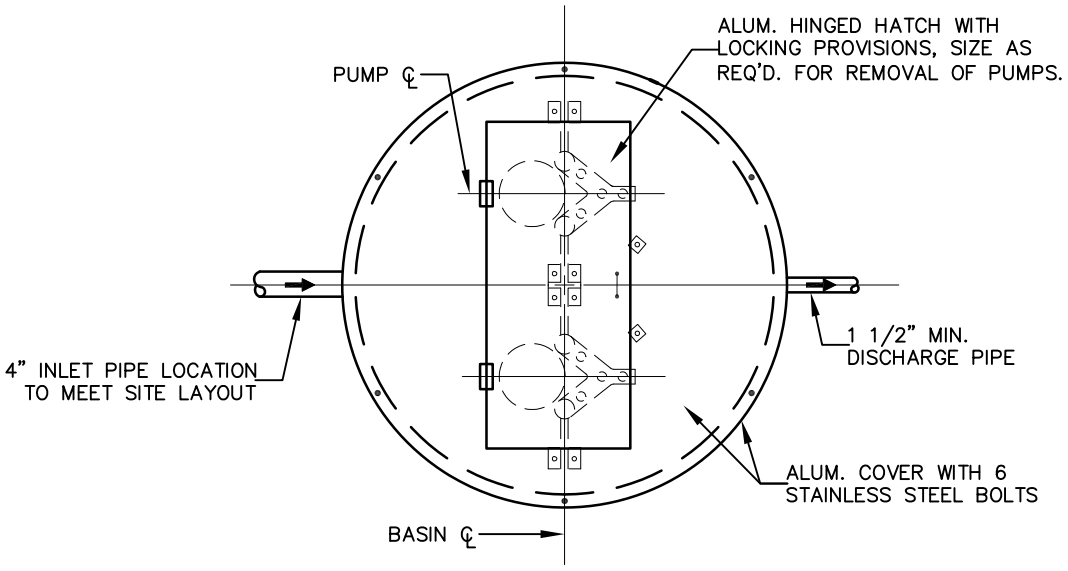

PLAN

DUPLEX GRINDER PUMP STATION FIBERGLASS BASIN - PLAN

NO SCALE

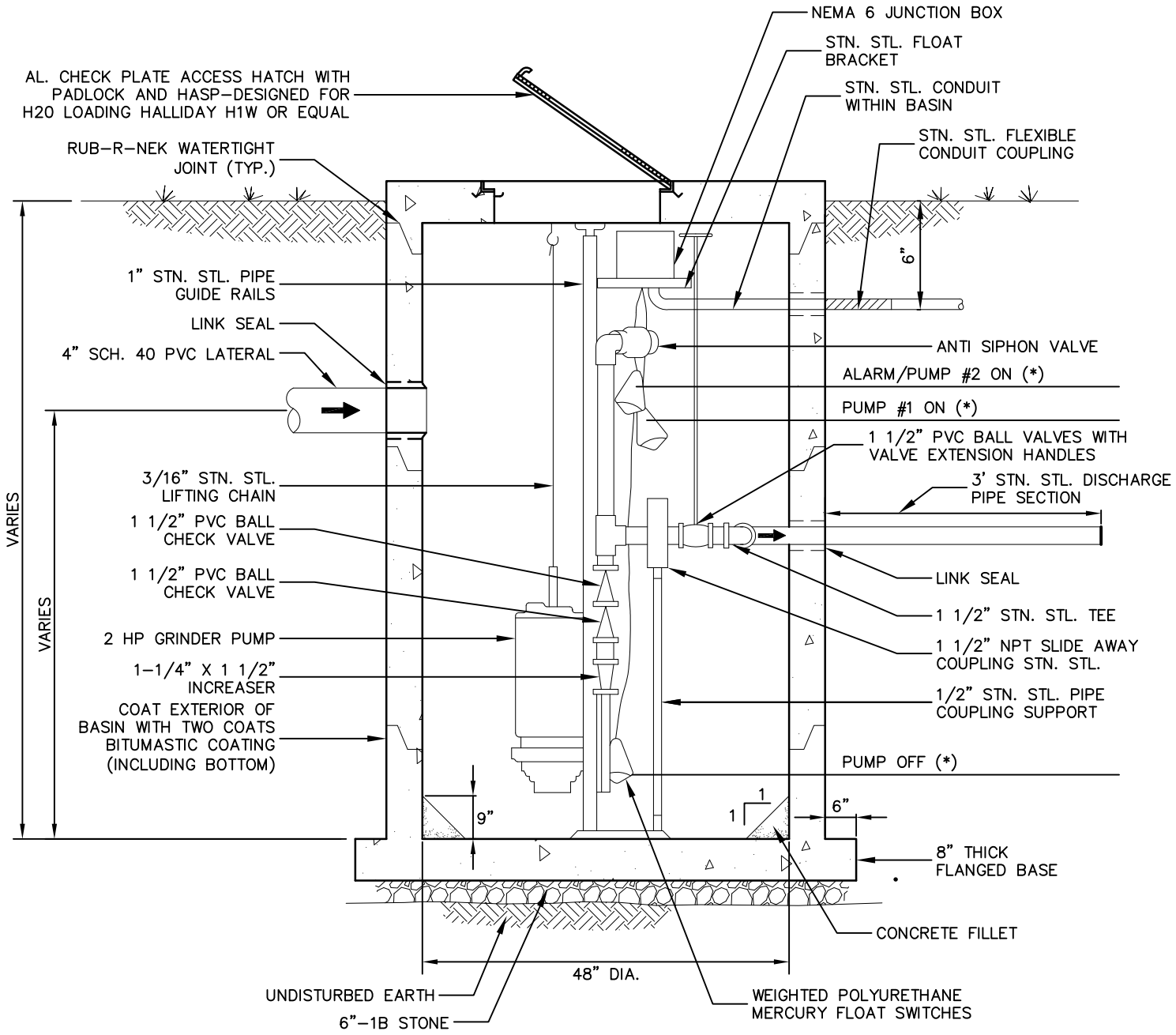

SECTION

NOTE:
* ELEVATIONS PER SITE CONDITIONS.

DUPLEX GRINDER PUMP STATION CONCRETE BASIN - SECTION

NO SCALE

NOTES:

1. CONTRACTOR SHALL PROVIDE A MINIMUM 3' SECTION OF 1 1/2" STAINLESS STEEL DISCHARGE PIPING OUTSIDE OF BASIN. THE 1 1/2" STAINLESS STEEL PIPE SHALL BE CONNECTED TO THE 1 1/2" PVC SERVICE LATERAL BY USE OF A COMPRESSION FITTING OR DRESSER COUPLING.

2. BACKFILL WITH EXCAVATED MATERIAL APPROVED BY THE ENGINEER & CONTAINING NO SOIL LUMPS, STONE, CONCRETE OR FOREIGN OBJECTS LARGER THAN ONE (1) INCH IN MAXIMUM DIMENSION OR WITH CLASS 1S MATERIAL CONSISTING OF NO. 8 COARSE AGGREGATE TO 6" BELOW GRADE; THEN TOPSOIL & SEED TOP 6".

3. MINIMUM NET EFFECTIVE STORAGE VOLUME BETWEEN PUMP SHUT-OFF ELEVATION & INVERT OF INFLUENT LINE SHALL BE 250 GALLONS OR 24 HOURS OF STORAGE VOLUME, WHICHEVER IS GREATER.

4. ALL COVER & ACCESS HARDWARE SHALL BE STAINLESS STEEL INCLUDING ALL NUTS, BOLTS, WASHERS, ETC. WHICH PENETRATE THE COVER OR THE BASIN.

5. ALL CONTROL PANEL EXTERIOR HARDWARE SHALL BE STAINLESS STEEL.

6. FIBERGLASS BASINS MAY NOT BE USED IN AREAS SUBJECT TO TRAFFIC LOADING.

7. LOCATION OF BASIN TO BE DETERMINED BY PROPERTY OWNER.

8. FINISHED GRADE SHALL BE SLOPED AWAY FROM THE BASIN TOP.

9. INTERIOR OF MANHOLE SHALL HAVE PROTECTIVE PVC COATING IN ACCORDANCE WITH SPECIFICATIONS.

10. EXTERIOR SHALL HAVE 2 COATS BITUMASTIC COATING (INCLUDING BOTTOM)

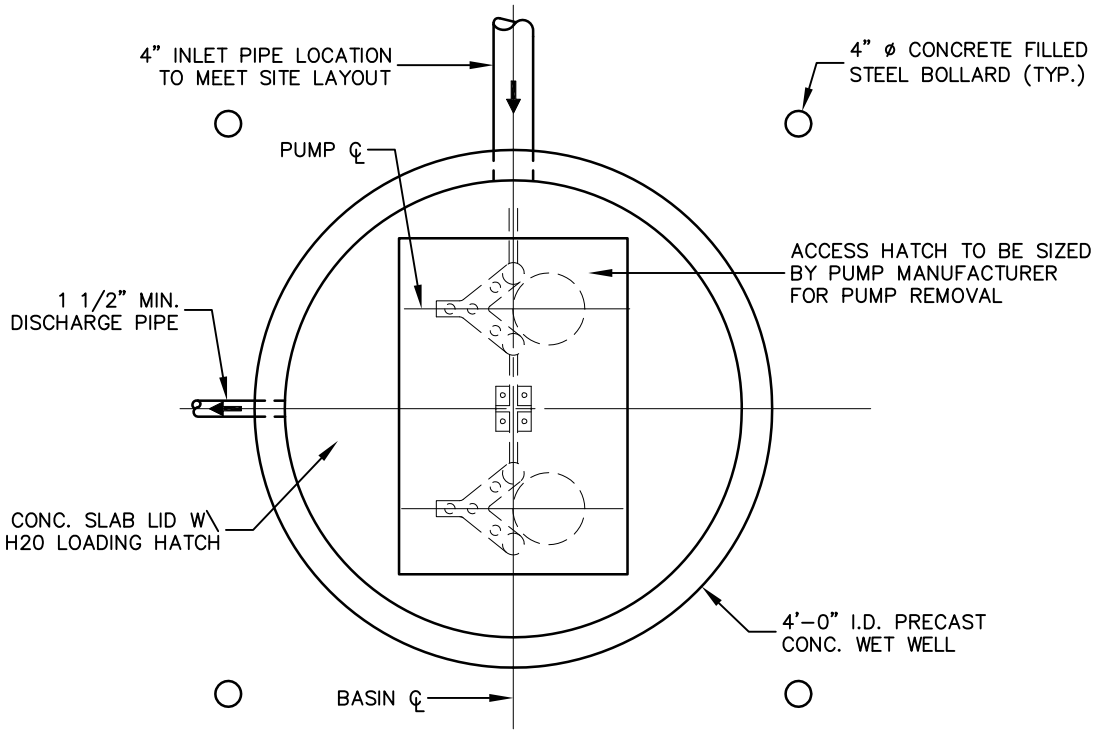

PLAN

DUPLEX GRINDER PUMP STATION CONCRETE BASIN - PLAN

NO SCALE

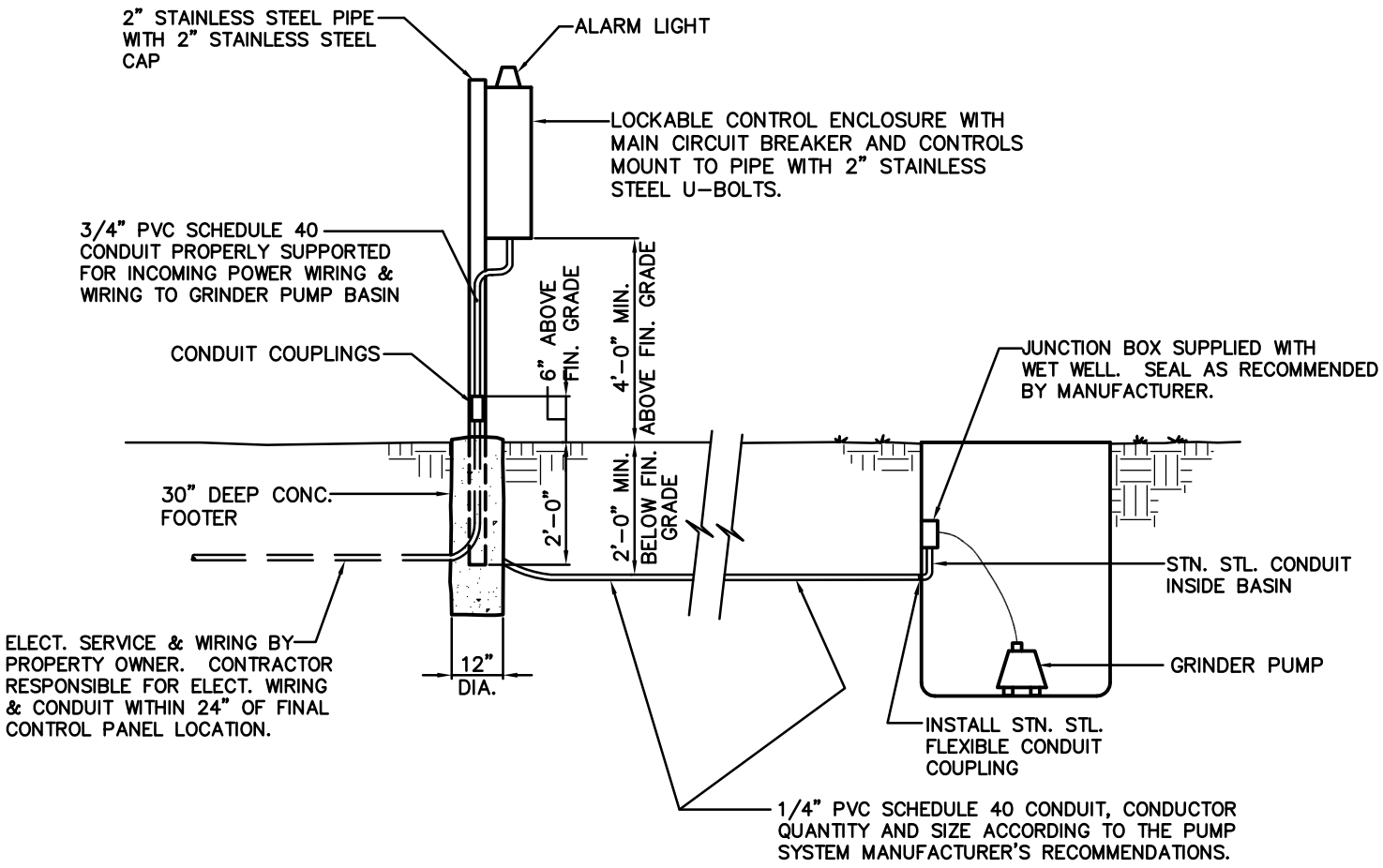

GRINDER PUMP ELECTRICAL

NOT TO SCALE

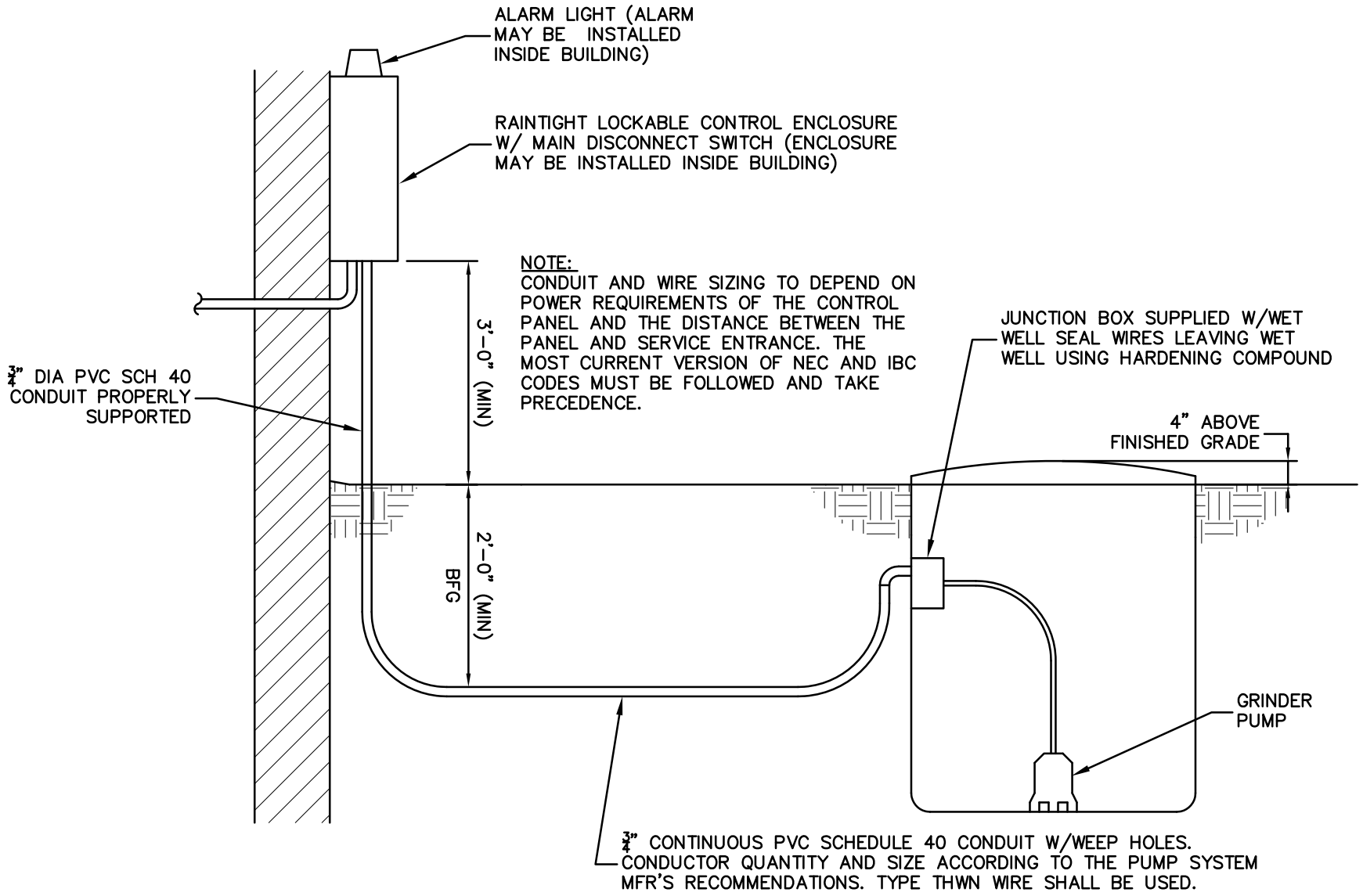

GRINDER PUMP WALL MOUNTED CONTROL PANEL

NO SCALE

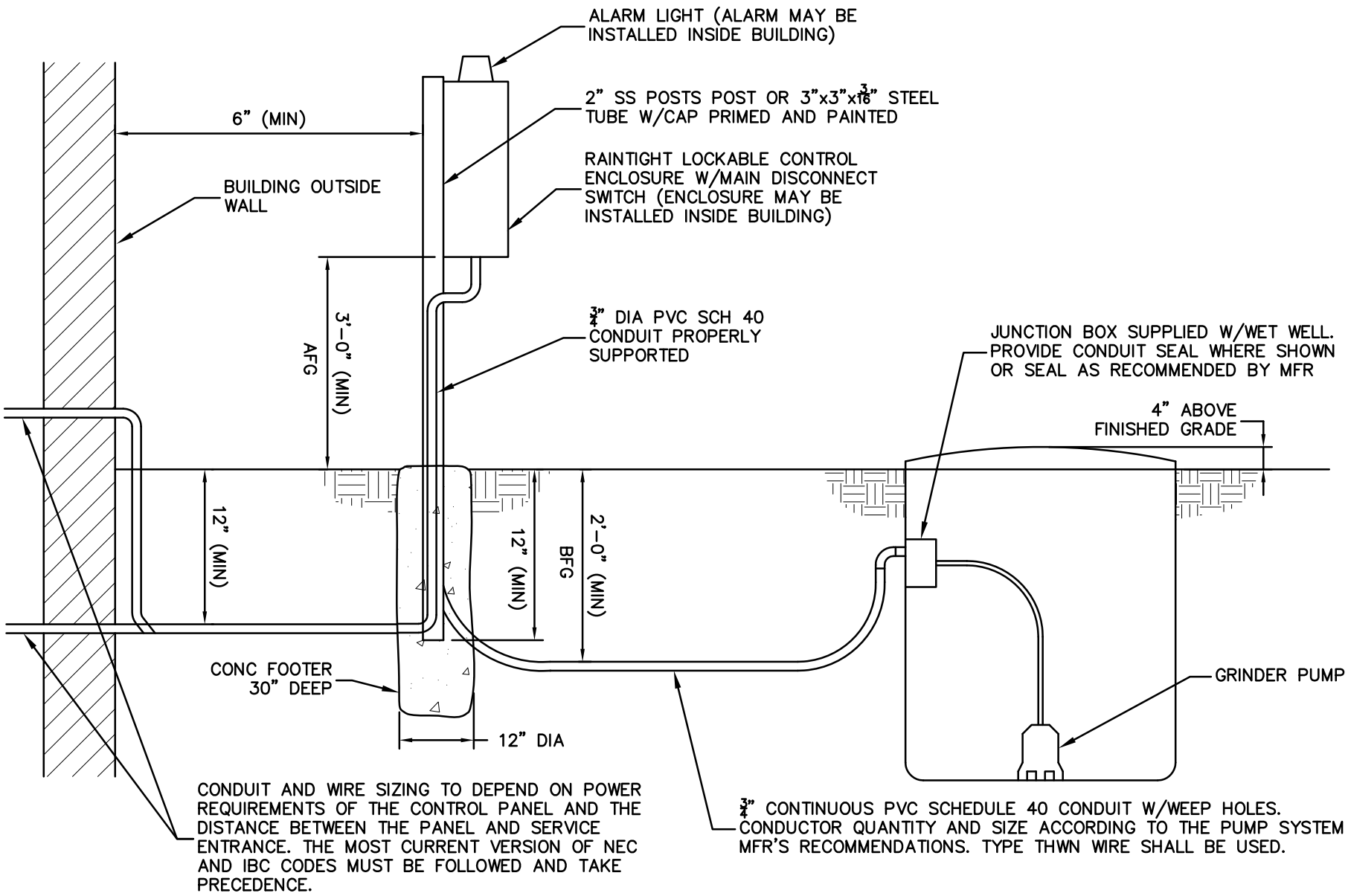

GRINDER PUMP POST MOUNTED CONTROL PANEL

NO SCALE

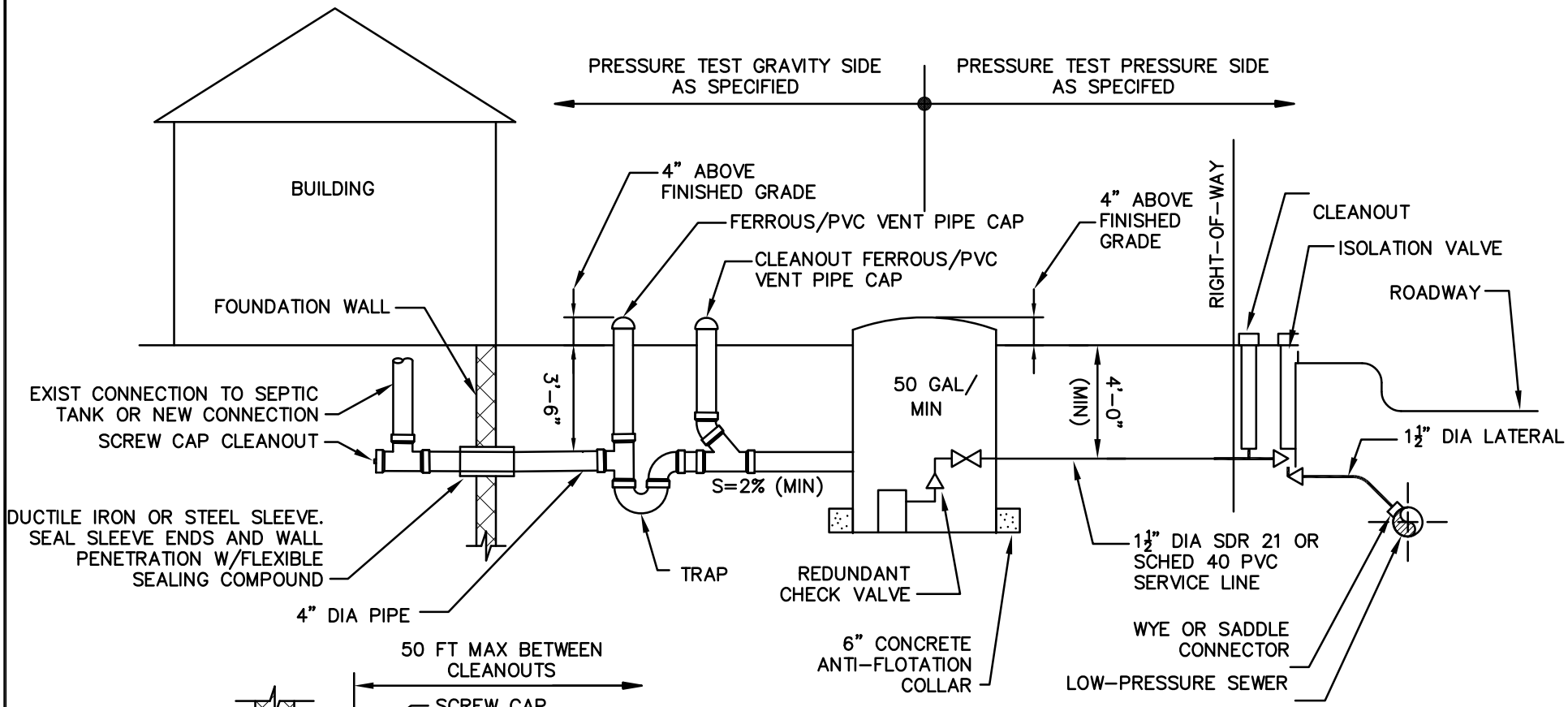

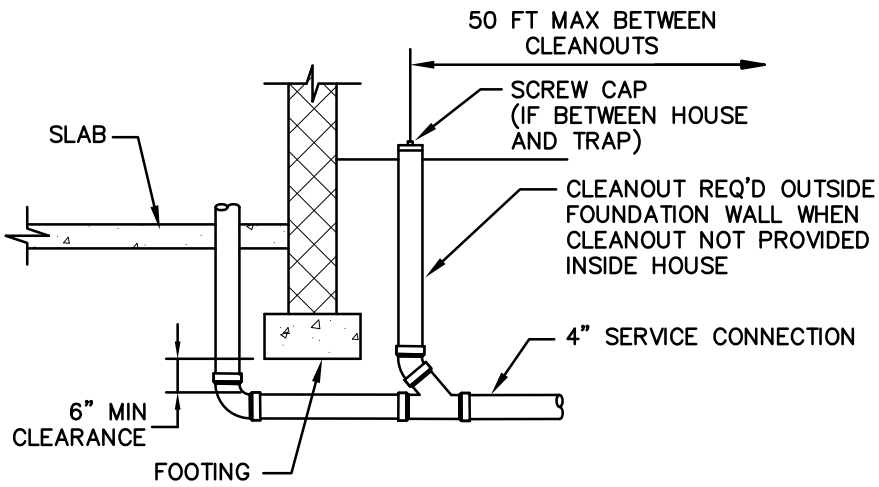

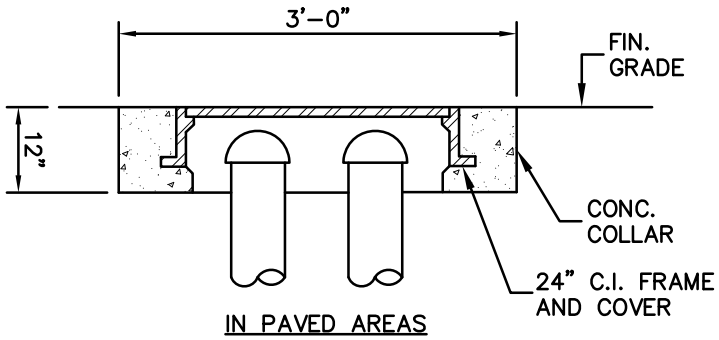

NOTES:

1. PROVIDE 6" OF AASHTO NO. 8 (OR PennDOT NO. 1B) STONE BELOW PIPE AND 12" ABOVE ENTIRE LENGTH OF PIPE.

2. TANK TO BE BEDDED ON 6" OF AASHTO NO. 57 (OR PennDOT NO. 2B) STONE.

TYPICAL GRINDER PUMP SERVICE LINE TO LOW PRESSURE SEWER SCHEMATIC

NO SCALE

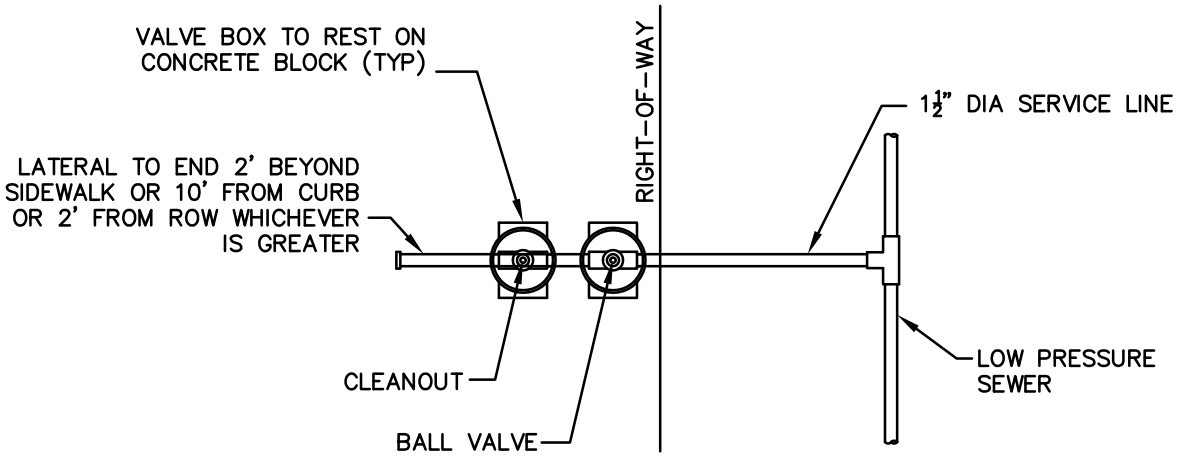

PLAN

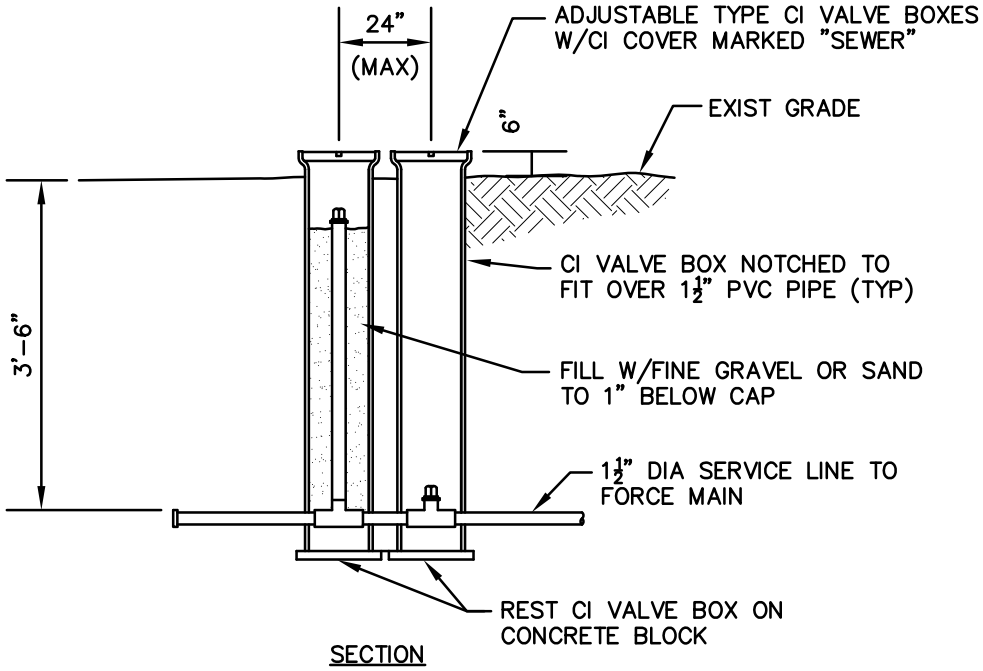

SECTION

NOTES:
1. ALL PVC CONNECTIONS SHALL BE SOLVENT WELDED UNLESS NOTED OTHERWISE.

2. PROVIDE 6" OF AASHTO NO. 8 (OR PennDOT NO. 1B) STONE BELOW PIPE AND 12" ABOVE ENTIRE LENGTH OF PIPE.

TYPICAL LATERAL CONNECTION TO LOW PRESSURE FORCEMAIN

NO SCALE

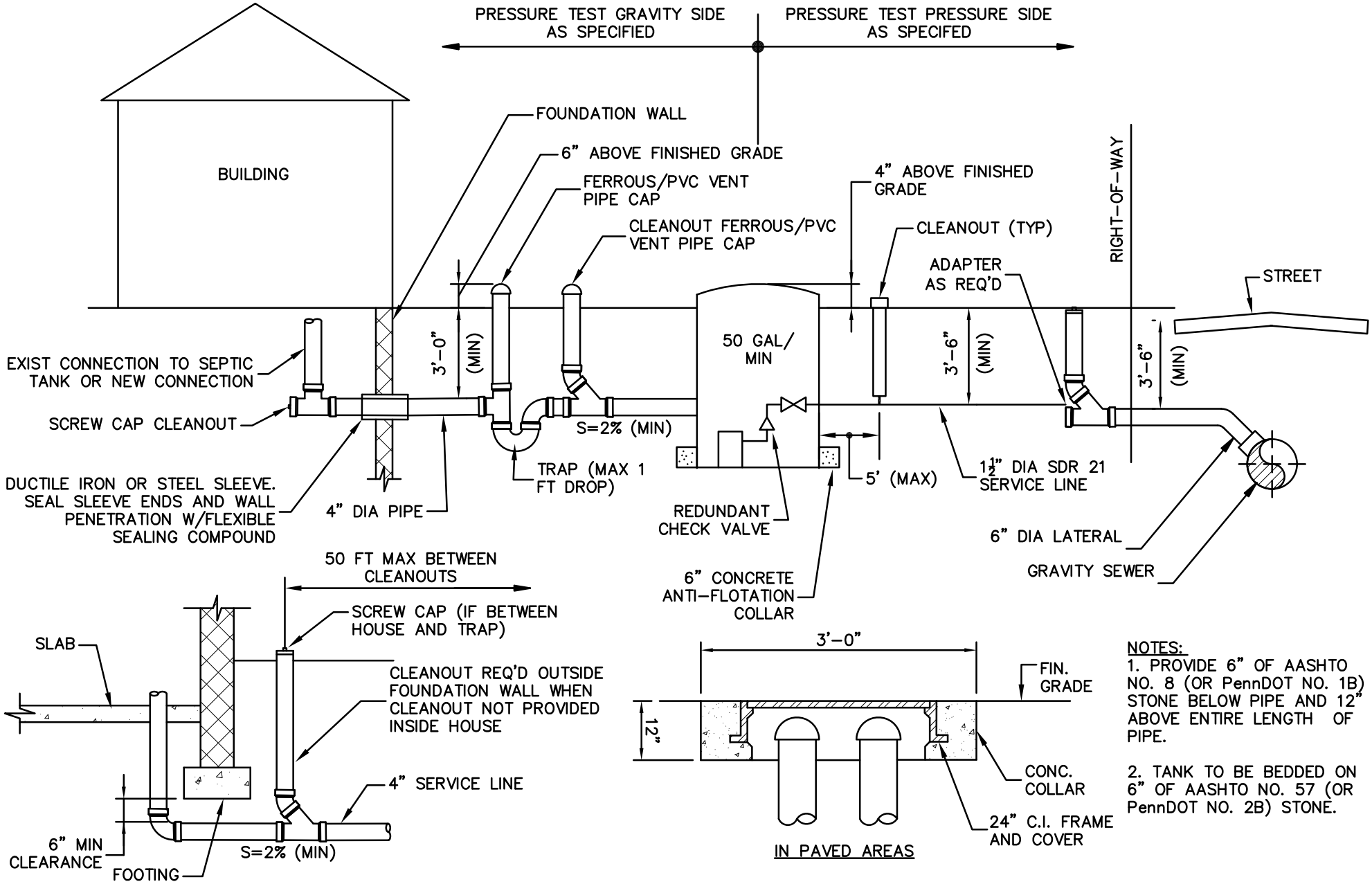

NOTES:

1. PROVIDE 6" OF AASHTO NO. 8 (OR PennDOT NO. 1B) STONE BELOW PIPE AND 12" ABOVE ENTIRE LENGTH OF PIPE.

2. TANK TO BE BEDDED ON 6" OF AASHTO NO. 57 (OR PennDOT NO. 2B) STONE.

TYPICAL GRINDER PUMP SERVICE LINE TO GRAVITY SEWER SCHEMATIC

NO SCALE

THIS PAGE INTENTIONALLY LEFT BLANK

THIS PAGE INTENTIONALLY LEFT BLANK

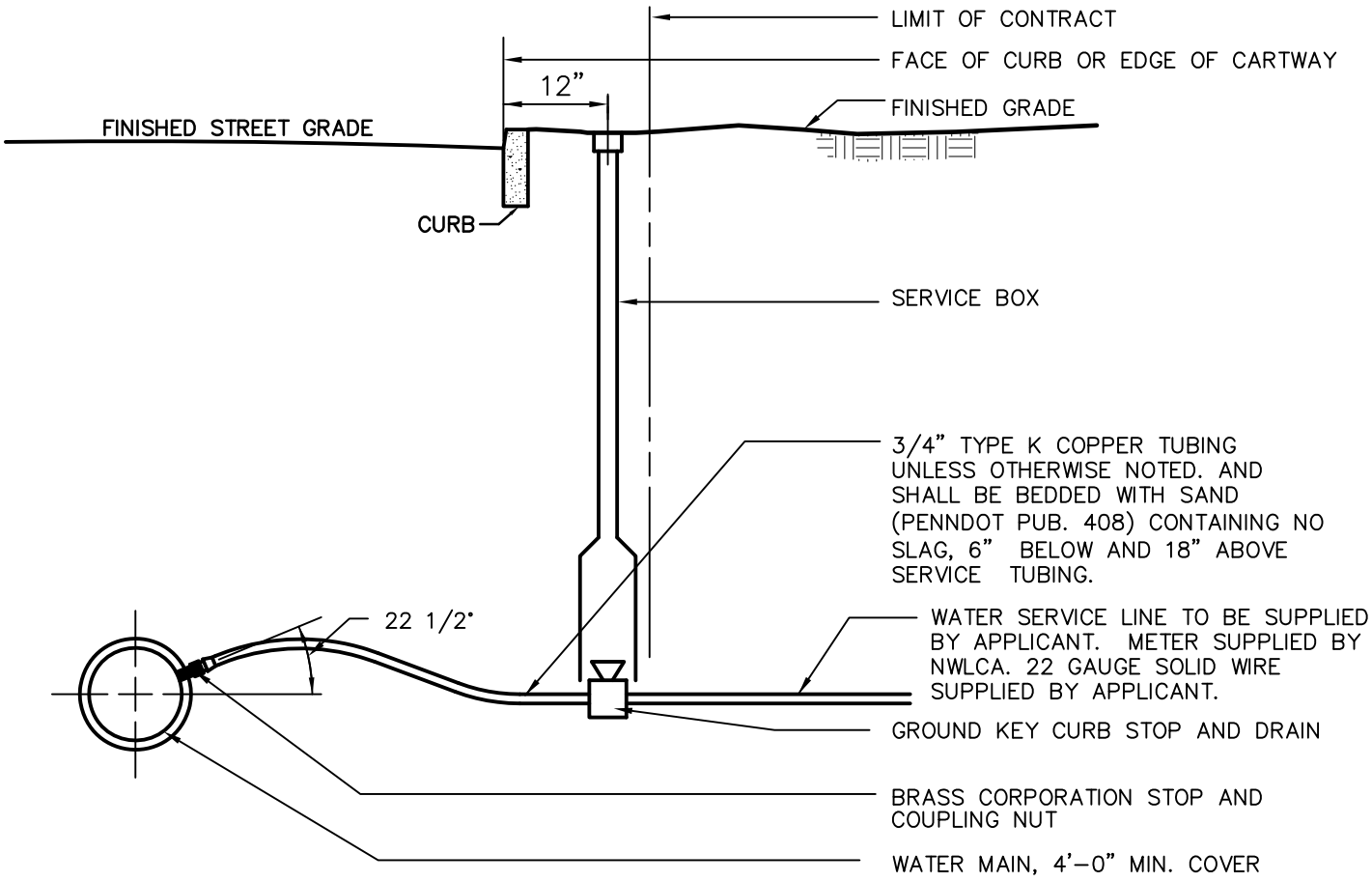

NOTES:

1. THE AUTHORITY REQUIRES THAT A WATER METERING CHAMBER BE INSTALLED FOR ALL WATER SERVICE LINES GREATER THAN 100 FEET MEASURED FROM PUBLIC RIGHT-OF-WAY TO FACE OF BUILDING ALONG THE WATER SERVICE LINE. THIS APPLIES TO BOTH RESIDENTIAL AND COMMERCIAL INSTALLATIONS. THE WATER METERING CHAMBER SHALL BE INSTALLED AT THE RIGHT-OF-WAY LINE OR ALTERNATE LOCATION APPROVED BY THE AUTHORITY.

2. WATER METERING CHAMBERS SHALL BE REVIEWED AND APPROVED BY THE AUTHORITY.

STANDARD
DOMESTIC SERVICE INSTALLATION

NOT TO SCALE

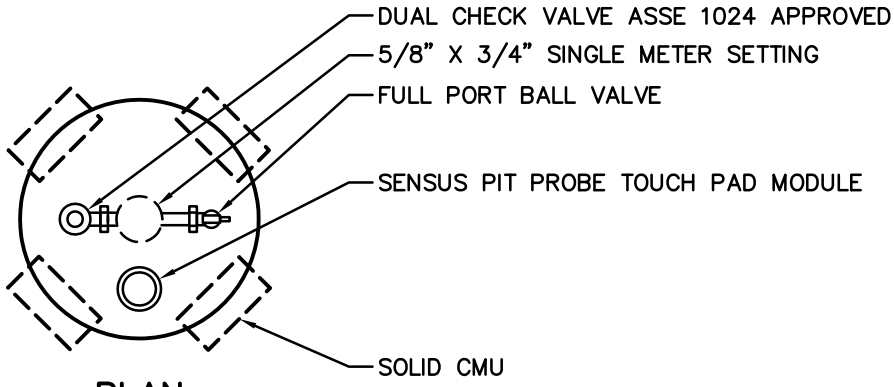

PLAN

NOTES:
1. FORD COIL PIT SETTER OR APPROVED EQUAL.
2. BRASS CONNECTIONS CONFORM TO ASTM C800.
3. BRASS VALVES & FITTINGS NSF/ANSI 61 APPROVED.

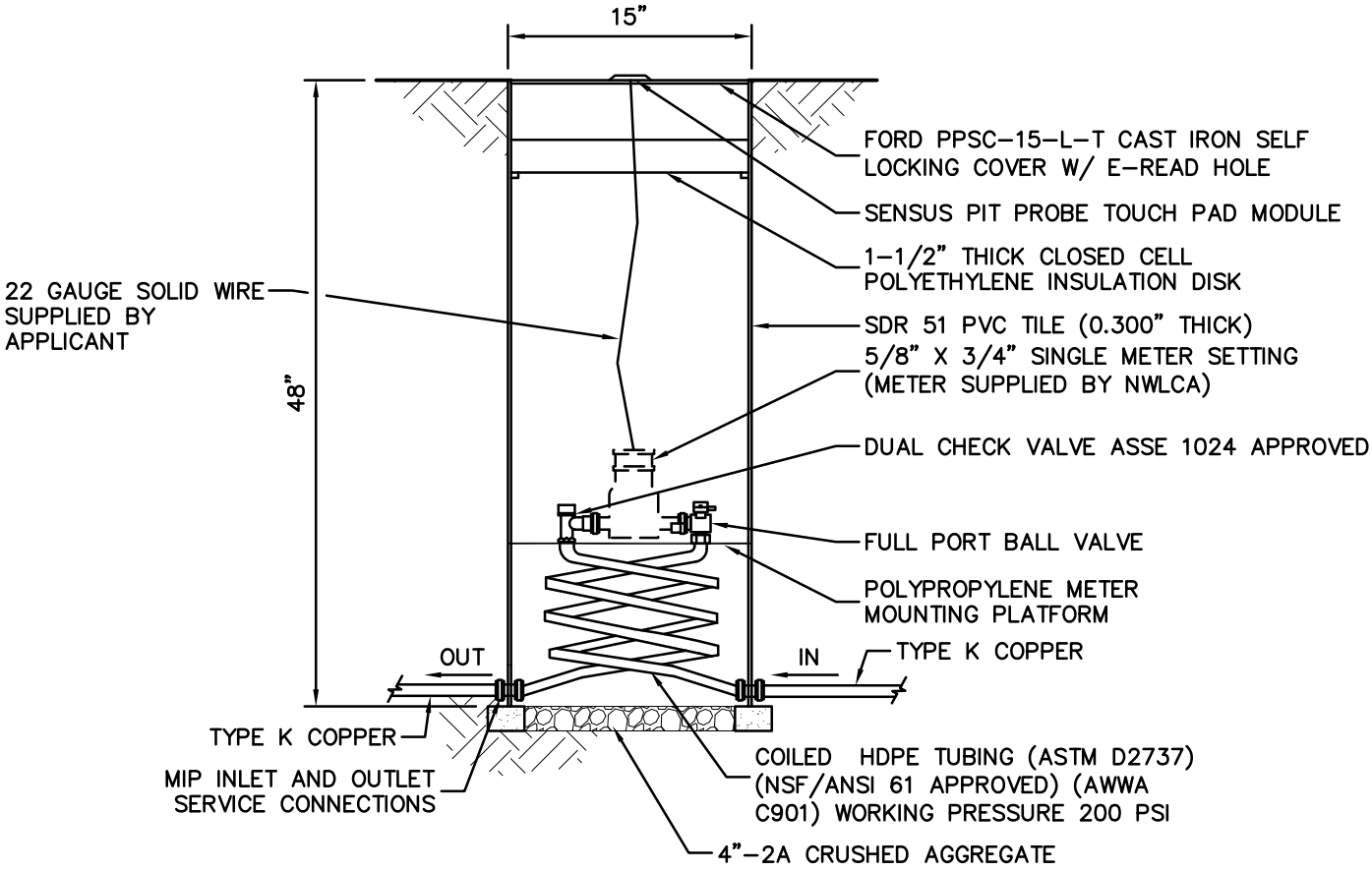

SECTION

NOTES:

1. THE AUTHORITY REQUIRES THAT A WATER METERING CHAMBER BE INSTALLED FOR ALL WATER SERVICE LINES GREATER THAN 100 FEET MEASURED FROM PUBLIC RIGHT-OF-WAY TO FACE OF BUILDING ALONG THE WATER SERVICE LINE. THIS APPLIES TO BOTH RESIDENTIAL AND COMMERCIAL INSTALLATIONS. THE WATER METERING CHAMBER SHALL BE INSTALLED AT THE RIGHT-OF-WAY LINE OR ALTERNATED LOCATION APPROVED BY THE AUTHORITY.

2. WATER METERING CHAMBERS SHALL BE REVIEWED AND APPROVED BY THE AUTHORITY.

3. OTHER SIZES SHALL BE REVIEWED ON A CASE BY CASE BASIS.

STANDARD 3/4" METERING CHAMBER

NO SCALE

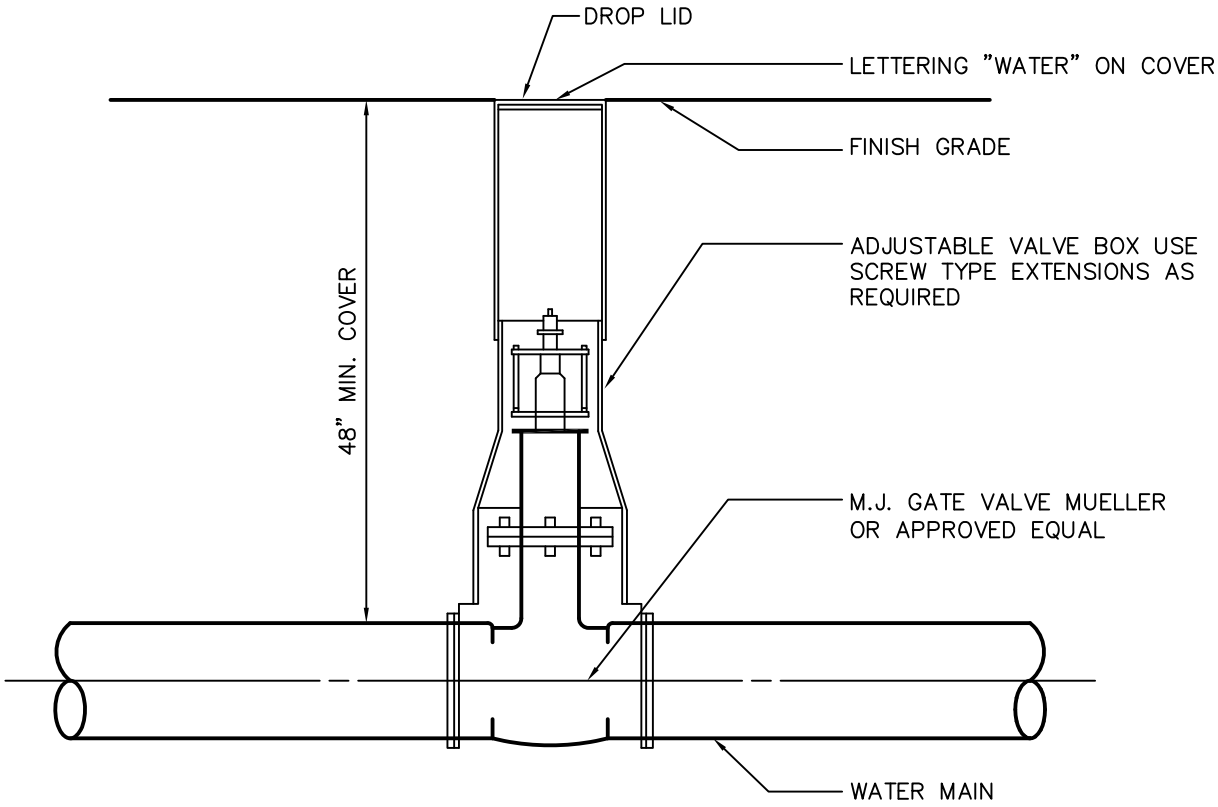

NOTE: IF EXTENSIONS ARE NECESSARY CONTRACTOR SHALL SET "PLUMB" AND ALIGN PROPERLY FOR ACCESS TO OPERATING NUT.

TYPICAL GATE VALVE & VALVE BOX

NOT TO SCALE

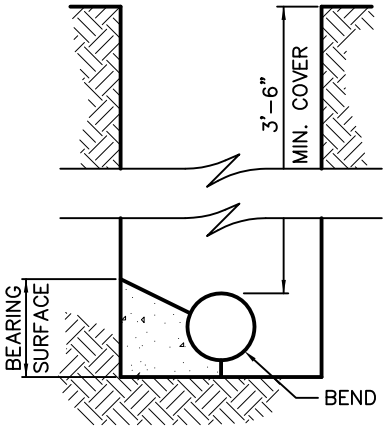

SECTION A-A

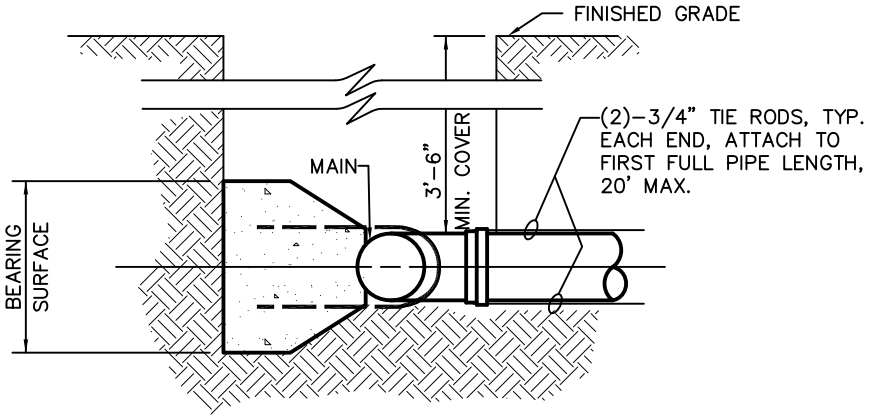

SECTION B-B

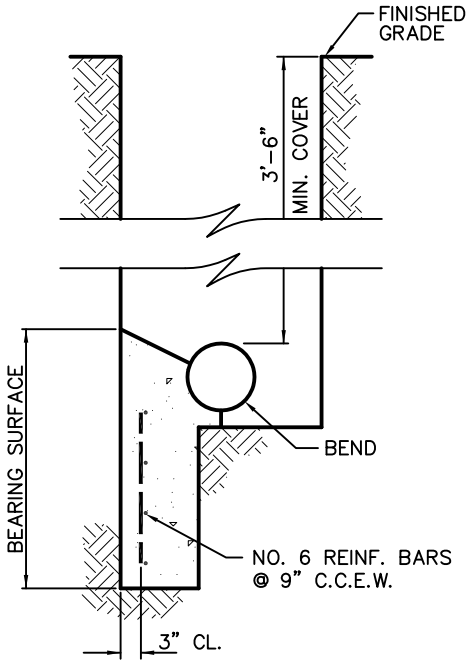

SECTION A-A

ADDITIONAL BEARING AS REQUIRED

NOTES:

1. NO COUPLING OR JOINTS SHALL BE COVERED WITH CONCRETE
2. REINFORCING BAR STRAPS TO BE SHAPED TO PIPE CURVATURE.
3. ALL EXPOSED STEEL TO BE PAINTED WITH TWO COATS ASPHALTIC PAINT.

TYPICAL THRUST BLOCKING FOR HORIZONTAL & VERTICAL DOWNWARD THRUSTS UP TO 150 PSI WORKING PRESSURE

NOT TO SCALE

NOTE:
THRUST BLOCKING FOR TEES SHALL HAVE THE SAME BEARING AREA AS 90° BENDS OF THE PIPE SIZE OF THE OUTLET. DEAD ENDS SHALL HAVE THE SAME BEARING AS 90° BENDS

BEARING AREA REQUIRED, SQUARE FEET

TYPE OF BEARING MATERIAL AND ALLOWABLE LOADS, PSF	4" AND LESS DEGREE BEND				6" AND 8" DEGREE BEND				10" AND 12" DEGREE BEND			
	11 1/4°	22 1/2°	45°	90°	11 1/4°	22 1/2°	45°	90°	11 1/4°	22 1/2°	45°	90°
LOOSE SAND OR MEDIUM CLAY – 2,000	1.0	2.0	2.7	4.0	1.5	3.0	6.0	10.0	3.0	6.2	12.0	22.0
PACKED GRAVEL AND SAND – 4,000	1.0	1.0	1.5	2.0	1.0	1.5	3.0	5.0	1.5	3.1	6.0	11.0
ROCK – 10,000	1.0	1.0	1.0	1.0	1.0	1.0	1.2	2.0	1.0	1.3	2.4	4.4

BEARING AREA REQUIRED, SQUARE FEET

TYPE OF BEARING MATERIAL AND ALLOWABLE LOADS, PSF	14" AND 16" DEGREE BEND OR DEFLECTION				18" AND 20" DEGREE BEND OR DEFLECTION			
	11 1/4°	22 1/2°	45°	90°	11 1/4°	22 1/2°	45°	90°
LOOSE SAND OR MEDIUM CLAY – 2,000	6.0	12.0	22.5	40.0	9.5	19.0	37.0	67.0
PACKED GRAVEL AND SAND – 4,000	3.0	6.0	11.3	20.0	4.8	9.5	18.5	33.5
ROCK – 10,000	1.2	2.4	4.5	8.0	2.0	3.8	7.4	13.5

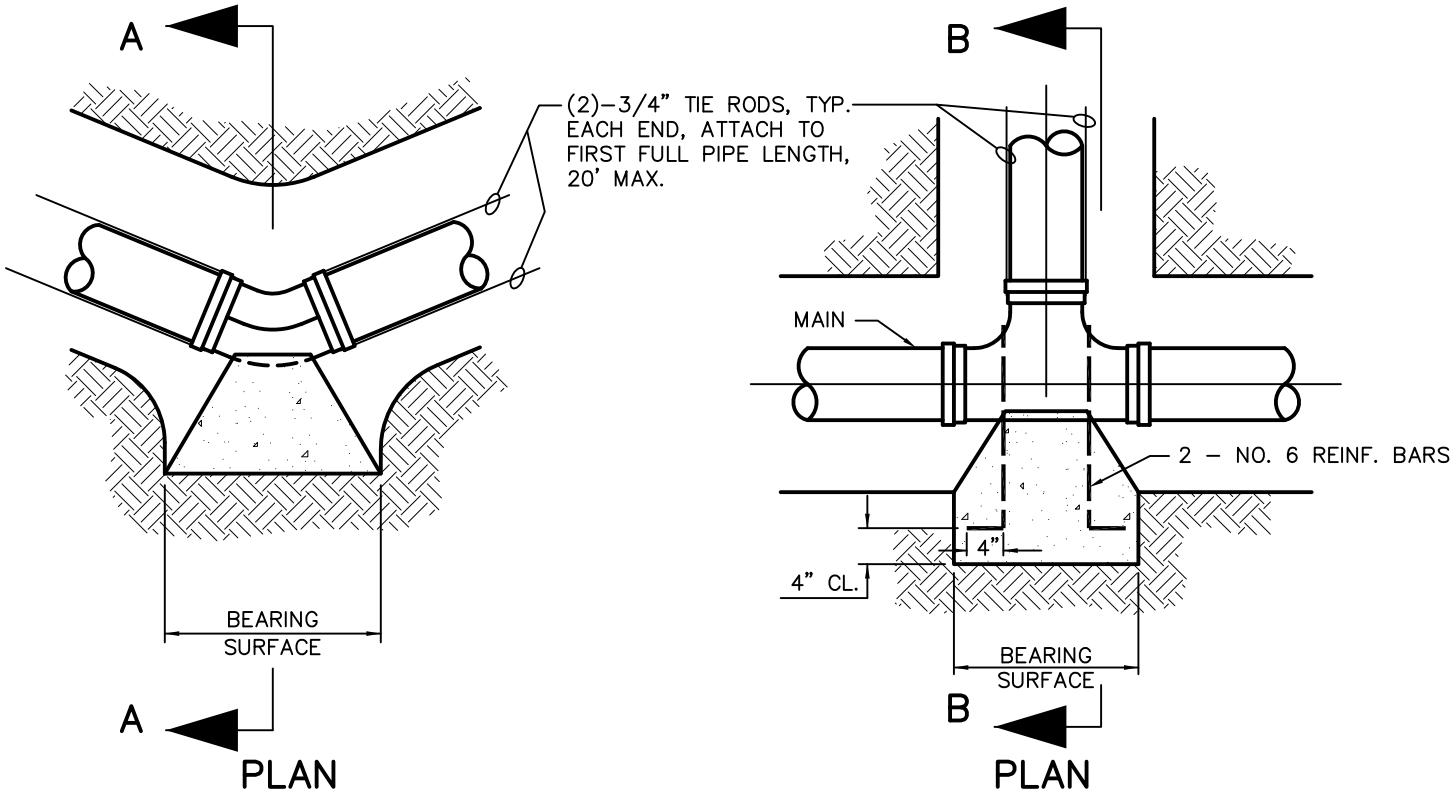

TYPICAL THRUST BLOCKING FOR HORIZONTAL & VERTICAL DOWNWARD THRUSTS UP TO 150 PSI WORKING PRESSURE

NOT TO SCALE

PIPE SIZES	DIMENSIONS OF CONCRETE BLOCKING								
	LENGTH			WIDTH			DEPTH		
	11 1/4°	22 1/2°	45°	11 1/4°	22 1/2°	45°	11 1/4°	22 1/2°	45°
4" AND SMALLER	2'	4'	4'	1.5'	3'	3'	1'	2'	3'
6" AND 8"	3'	4'	6'	3'	3'	3'	2'	3'	4'
10" AND 12"	4.5'	6'	8'	3'	3'	4'	3'	4.5'	5'
14" AND 16"	6'	8'	11'	3.5'	3.5'	5'	2.5'	5'	5'
18" AND 20"	7'	9'	13'	4'	5'	5.5'	4'	5'	6'

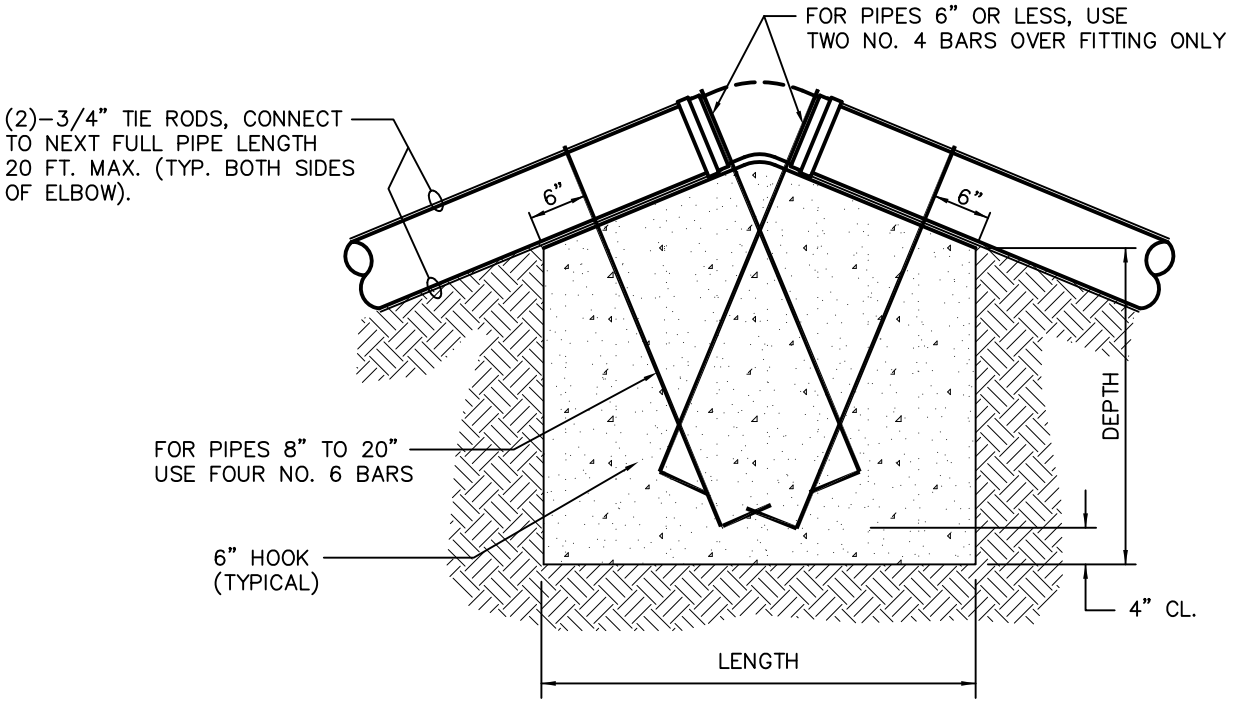

TYPICAL SECTION

NOTES:

1. NO COUPLING OR JOINTS SHALL BE COVERED WITH CONCRETE
2. REINFORCING BAR STRAPS TO BE SHAPED TO PIPE CURVATURE.
3. ALL EXPOSED STEEL TO BE PAINTED WITH TWO COATS ASPHALTIC PAINT.

THRUST BLOCKING
VERTICAL THRUSTS UPWARD UP TO
150 PSI WORKING PRESSURE

NOT TO SCALE

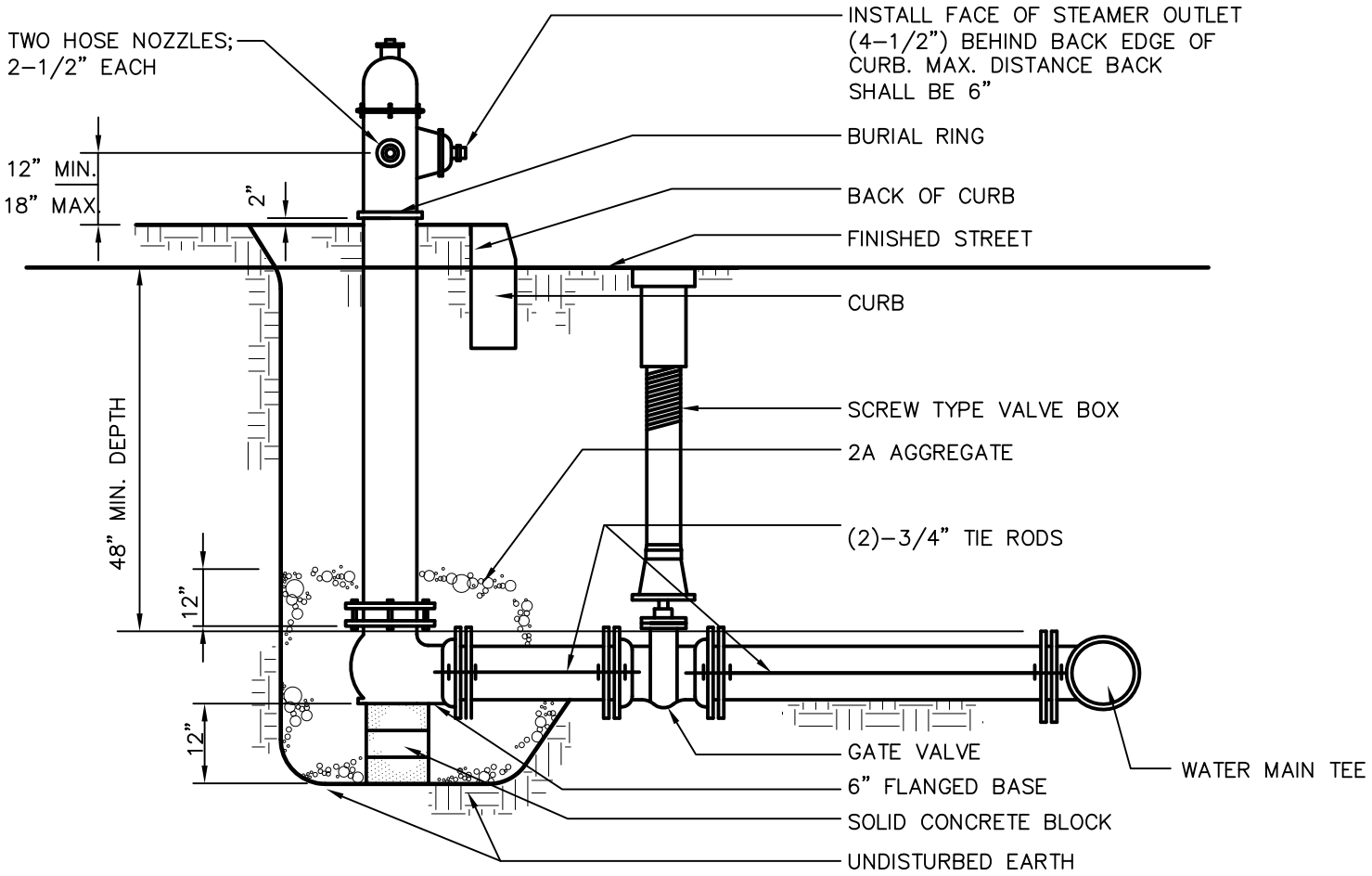

NOTES:

1. HYDRANT SHALL BE PAINTED RED.
2. HYDRANT SHALL MEET UL–FM STANDARD SPECIFICATIONS.

FIRE HYDRANT SETTING

NOT TO SCALE

THIS PAGE INTENTIONALLY LEFT BLANK

THIS PAGE INTENTIONALLY LEFT BLANK

THIS PAGE INTENTIONALLY LEFT BLANK

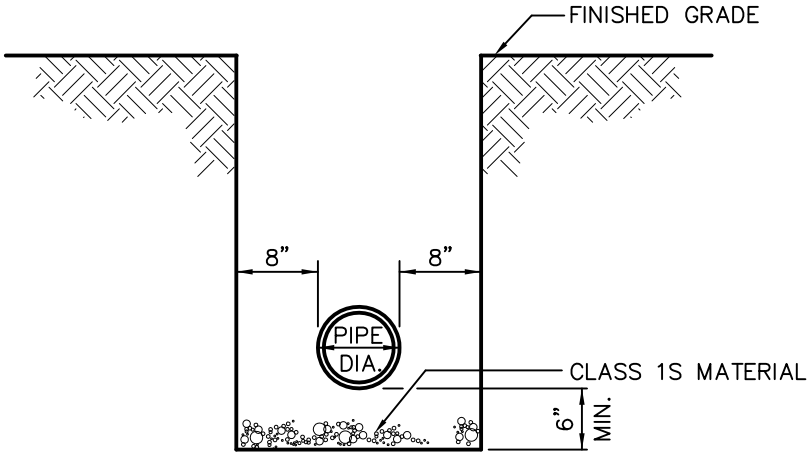

TYPICAL TRENCH

NOT TO SCALE

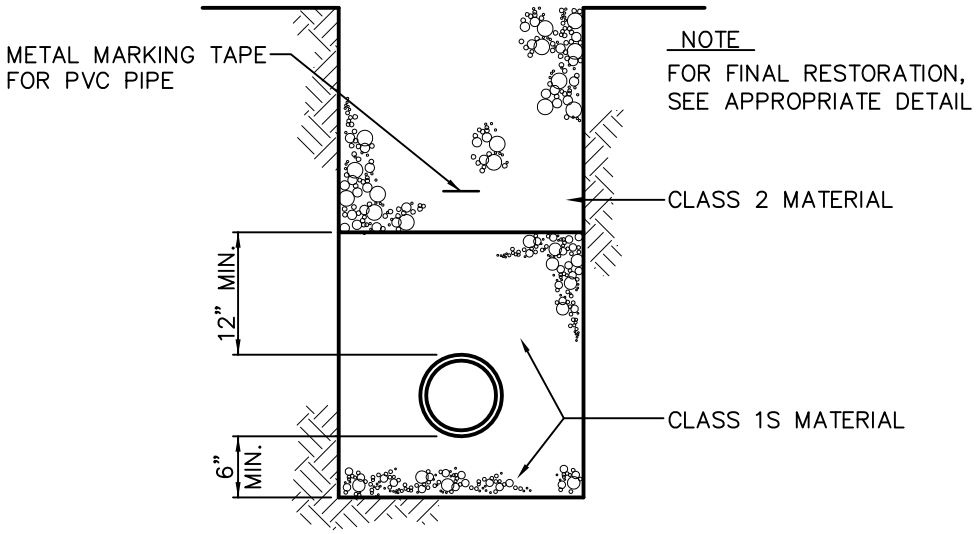

TYPICAL BACKFILL
(OTHER THAN PAVED AREAS)

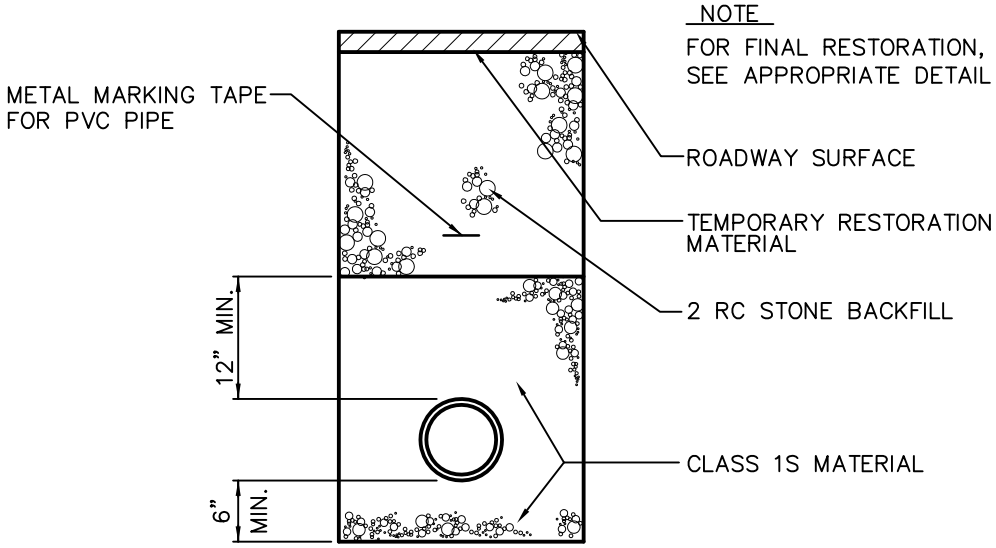

TYPICAL BACKFILL
(ALL PAVED AREAS)

TYPICAL TRENCH BACKFILL

NOT TO SCALE

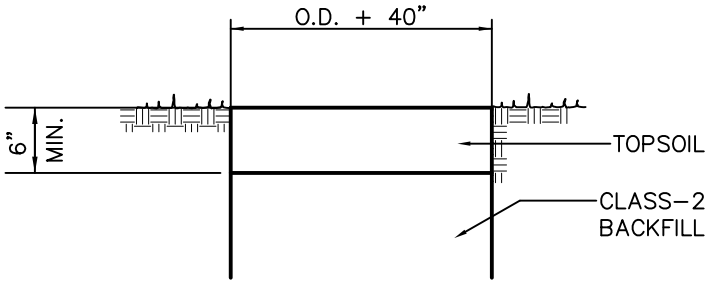

LAWN RESTORATION DETAIL

NOT TO SCALE

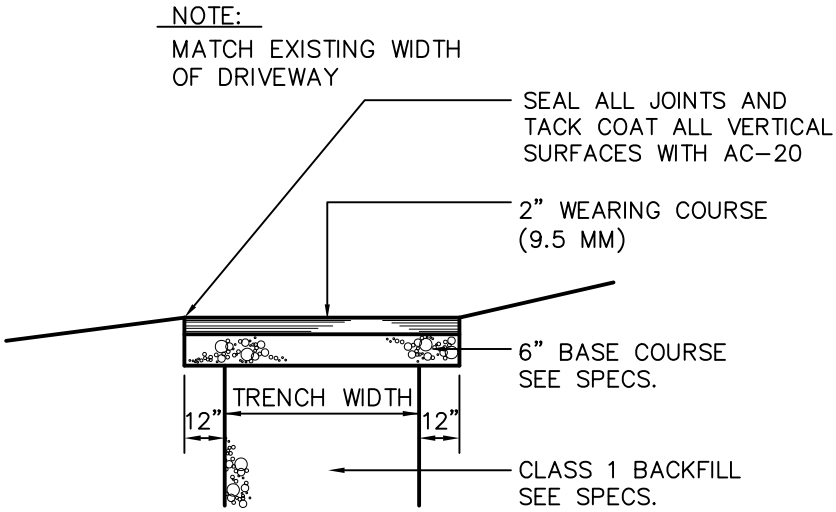

PAVED DRIVEWAY RESTORATION

NOT TO SCALE

NOTE:

MATCH EXISTING WIDTH
OF DRIVEWAY

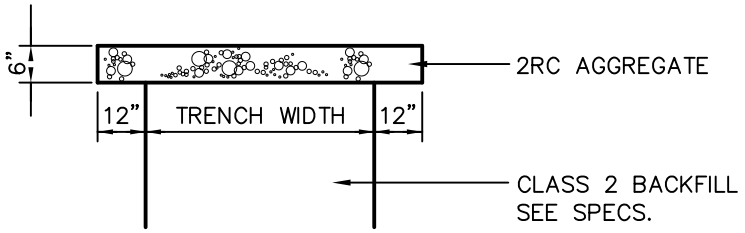

STONE DRIVEWAY RESTORATION

NOT TO SCALE

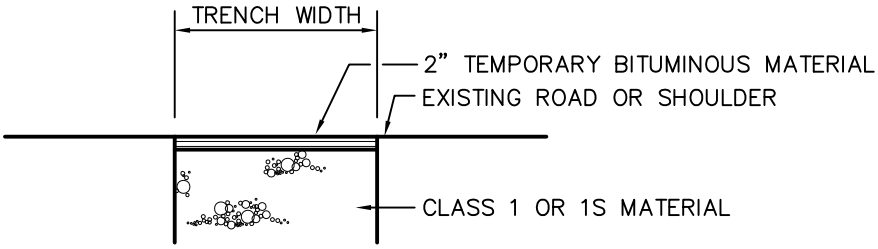

TEMPORARY TOWNSHIP ROADWAY AND SHOULDER RESTORATION

NOT TO SCALE

NOTES

- ALL VERTICAL CUTS SHALL BE SAWCUT ONLY
- MATERIAL AND PLACEMENT FOR COARSE AND FINE AGGREGATES SHALL BE IN ACCORDANCE WITH PENNDOT SPECIFICATIONS PUBLICATIONS 408, LATEST EDITION.

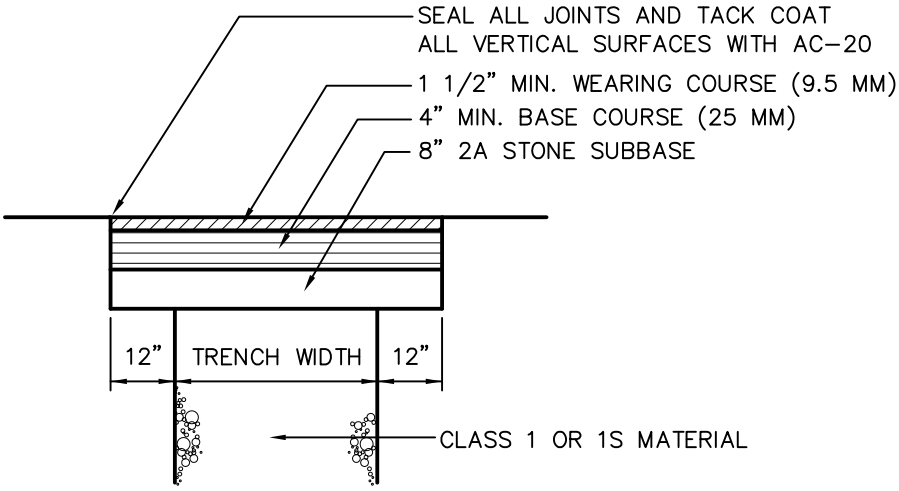

PERMANENT TOWNSHIP ROADWAY AND SHOULDER RESTORATION

NOT TO SCALE

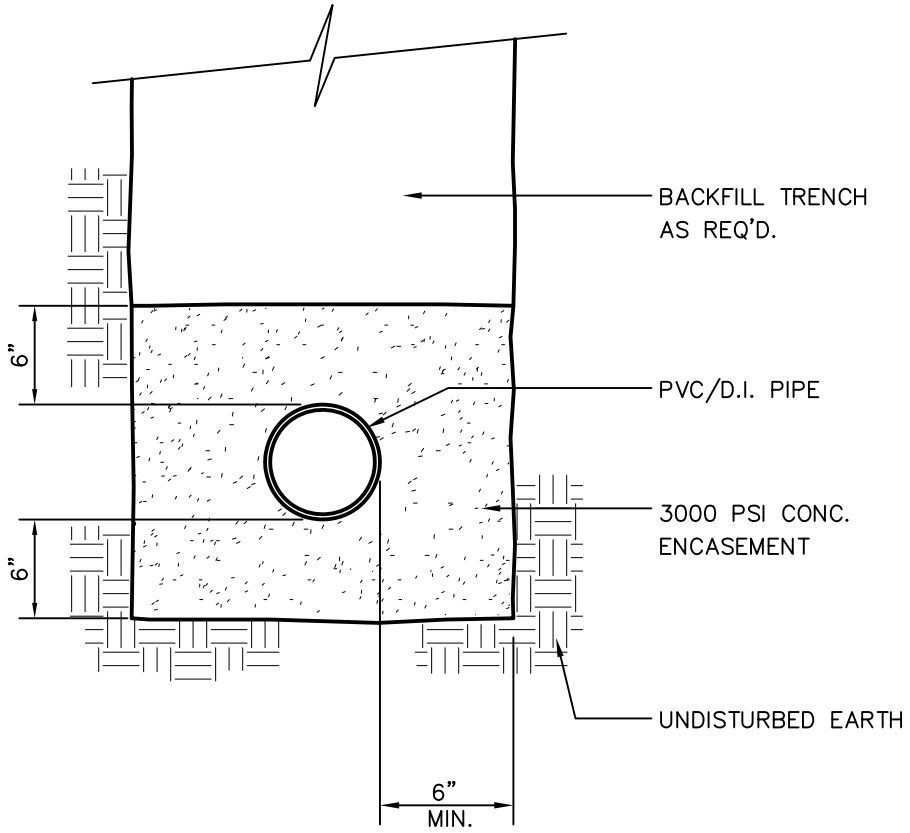

CONCRETE ENCASEMENT

NOT TO SCALE

NOTES:

1. CLAY DIKES SHALL BE INSTALLED AROUND SANITARY SEWER LINE EVERY 200 FEET, OR AD DETERMINED BY THE AUTHORITY.

2. CLAY DIKE SHALL CONSIST OF CLAY CONTAINING NO MORE THAN 15% (BY VOLUME) STONE NO LARGER THAN TWO (2) INCHES IN DIAMETER. CLAY SHALL BE PLACED IN SIX (6) INCH LIFTS AND COMPACTED BY A MECHANICAL TAMPER TO NOT LESS THAN 95% OF MAXIMUM DENSITY AT OPTIMUM MOISTURE CONTENT.

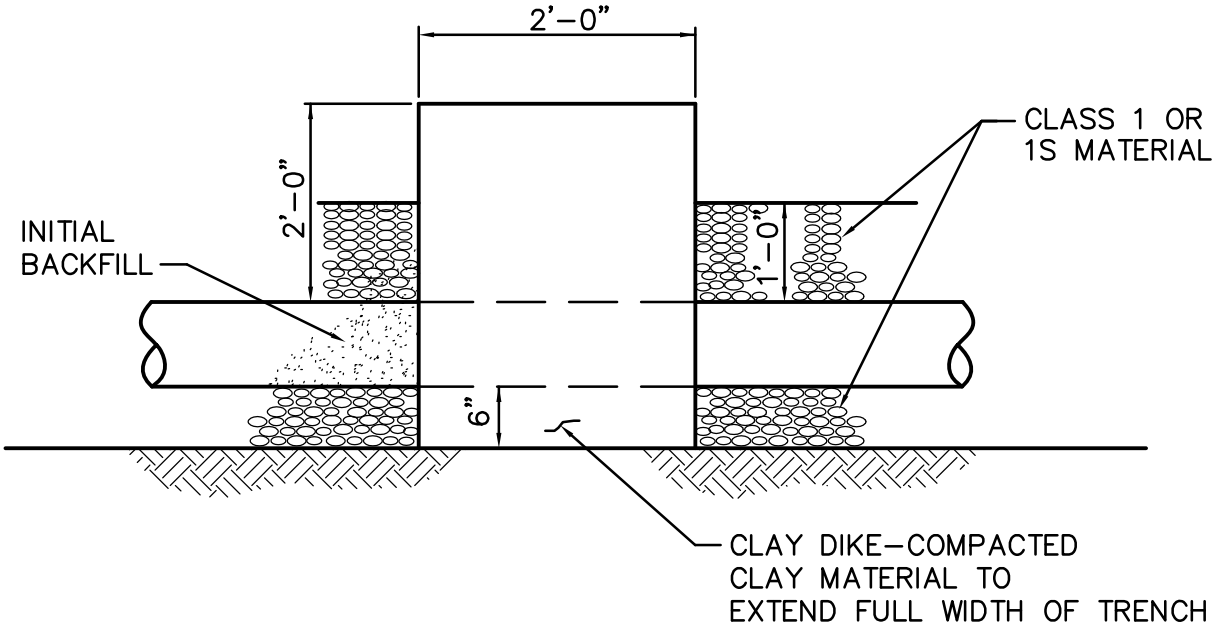

CLAY DIKE DETAIL

NOT TO SCALE

APPENDIX A

SPECIFICATIONS FOR CONSTRUCTION OF RESIDENTIAL BUILDING SEWERS & WATER SERVICE LINES

NORTHWESTERN LANCASTER COUNTY AUTHORITY

PENN TOWNSHIP
LANCASTER COUNTY
PENNSYLVANIA

SPECIFICATIONS

FOR CONSTRUCTION OF RESIDENTIAL

BUILDING SEWERS
&
WATER SERVICE LINES

March 2014

INTRODUCTION

The following Specifications for Construction of Residential Building Sewers and Residential Water Service Lines are in accordance with, and subject to Ordinance No. 3-1986 and subsequent amendments as adopted by the Board of Supervisors of Penn Township and the Northwestern Lancaster County Authority, hereinafter referred to as the Authority. All construction shall conform to the Northwestern Lancaster County Authority "Specifications for Construction of Water Lines & Sanitary Sewers". A copy of this information may be obtained at the Township office. All construction must comply with the requirements of the Pennsylvania Uniform Construction Code

No building sewer or water service line shall be constructed or connected to the sewer system or water system without first obtaining a permit, in writing, from the Authority.

MINIMUM CONSTRUCTION SPECIFICATIONS FOR BUILDING SEWERS

1. Building sewers shall meet the following requirements and as shown on the detail drawings for "SANITARY SEWER LATERAL", "CLEANOUT" and "BUILDING SEWER".
2. The pipe and fittings shall be made of PVC SDR 35 or Schedule 40 PVC material.
3. All building sewers shall maintain a minimum horizontal separation of 5-feet with other utilities. A 10-feet horizontal separation is preferable.
4. A minimum pipe slope of 2% shall be maintained for the building sewer. A minimum cover of 3-feet shall be maintained over the top of the pipe. All pipe shall be placed on a 6-inch bedding of PADOT 1B fine crushed stone. The PADOT 1B crushed stone shall be used to backfill the pipe to a minimum of 6-inches above the top of the pipe.
5. Ground and surface water shall not be permitted to enter the sewer system. Care shall be used to avoid debris from entering the sewer system.
6. Building sewers shall be placed in straight lines, or a cleanout shall be installed at all bends. 90-degree bends shall be completed by use of two 45-degree fittings. 90-degree fittings shall not be permitted.
7. Cleanouts shall be placed such that there is a maximum of 100-feet of pipe between cleanouts.
8. No trench shall be backfilled until the building sewer has been inspected and approved by an Authority representative.
9. A building trap shall be installed as indicated on the "TYPICAL BUILDING SEWER CONNECTION" detail.
10. Basement and garage drains, cellar drains, sump pumps and any other drains conveying any liquid other than sanitary sewer meeting the requirements of the Authority's Ordinance shall not be connected to the sewer system.
11. Each building sewer shall be subjected to a test prior to approval by the Authority. The test shall be witnessed by a representative of the Authority and the building sewer shall not be

deemed acceptable until the building sewer has satisfactorily passed the test. All costs of testing and subsequent tests shall be the responsibility of the owner.

The building sewer shall be tested by plugging the line at the point of connection with the building sewer by using a test tee and by plugging the building sewer just before the point of connection with the sewage drainage system of any structure. All risers, vents, plugs and cleanouts shall be adequately blocked, plugged and supported to withstand the pressure associated with the test.

An air test shall be performed. A pressure of 5.0 psi shall be maintained for 15 minutes, with no drop in pressure.

12. Building sewers greater than 12-feet depth shall be placed in accordance with the Authority's "Specifications for Construction of Water Systems & Sewer Systems".
13. Building Sewers shall be located within the property lines of the property being serviced unless an easement has been obtained and approved by the Authority.
14. Multiple service to more than one property for a building sewer is not permitted. A single sewer connection to the Authority's system for each property is required.
15. All construction shall be performed in a competent, workmanlike manner in accordance with recognized standards of the plumbing trade and specifications currently on file with the Authority.
16. The Authority, at its sole discretion, may stop or require reconstruction of, any work not conforming to these standards or specifications.
17. Property owners shall be responsible for the completion of the building sewer connection to the point of connection to the Authority's lateral connecting to the sewer system. Properties with gravity connections to the Authority gravity sewer system are responsible for the connection of the on-site building sewer from the residence to the Authority's lateral at the right-of-way line.

MINIMUM CONSTRUCTION SPECIFICATIONS FOR WATER SERVICE LINES

1. Water service lines shall meet the following requirements and as shown on the detail drawing for "STANDARD DOMESTIC SERVICE INSTALLATION."
2. Copper Tubing: The water service line shall be in conformance with ASTM B 88, Type K, for ¾-inch to 2½-inch lines. Service Line Fittings: Threads for underground service line fittings shall be in full accordance with AWWA C800. Water service pipe listed in the Water Supply and Distribution section of the International Plumbing Code may be substituted with specific Authority approval.
3. All water service lines shall maintain a minimum horizontal separation of 5-feet with other utilities. A 10-feet horizontal separation is preferable.
4. A minimum cover of four (4) feet shall be maintained over the top of the pipe. All pipe shall be placed on a 6-inch bedding of sand. The sand shall be used to backfill the pipe to a minimum of 18-inches above the top of the pipe.
5. No trench shall be backfilled until the water service line has been inspected and approved by an Authority representative.
6. Water service lines shall be located within the property lines of the property being serviced unless an easement has been obtained and approved by the Authority.
7. Multiple service to more than one property for a water service line is not permitted. A single water connection to the Authority's system for each property is required.
8. All construction shall be performed in a competent, workmanlike manner in accordance with recognized standards of the plumbing trade and specifications currently on file with the Authority.
9. A backflow prevention device (dual check valve ASSE 1024 approved) shall be installed on each water service line adjacent to the meter.
10. The Authority requires that a water metering chamber be installed for all water service lines greater than 100 feet measured from public right-of-way to face of building along the water service line. This applies to both residential and commercial installations.
11. The Authority, at its sole discretion, may stop or require reconstruction of, any work not conforming to these standards or specifications.

CONSTRUCTION DETAILS

FOR CONSTRUCTION OF RESIDENTIAL

BUILDING SEWERS
&
WATER SERVICE LINES

DESCRIPTION	DETAIL #
TYPICAL GRAVITY BUILDING SEWER CONNECTION	18
SHALLOW SANITARY SEWER LATERAL	19
DEEP SANITARY SEWER LATERAL (12’ AND DEEPER)	20
CLEANOUT	22
SIMPLEX GRINDER PUMP STATION FIBERGLASS BASIN – SECTION	26
SIMPLEX GRINDER PUMP STATION FIBERGLASS BASIN – PLAN	27
GRINDER PUMP ELECTRICAL	32
GRINDER PUMP WALL MOUNTED CONTROL PANEL	33
GRINDER PUMP POST MOUNTED CONTROL PANEL	34
TYPICAL GRINDER PUMP SERVICE LINE TO LOW PRESSURE SEWER SCHEMATIC	35
TYPICAL LATERAL CONNECTION TO LOW PRESSURE FORCEMAIN	36
TYPICAL GRINDER PUMP SERVICE LINE TO GRAVITY SEWER SCHEMATIC	37
STANDARD WATER SERVICE INSTALLATION	40
STANDARD ¾” METERING CHAMBER	41
TYPICAL TRENCH	50
TYPICAL TRENCH BACKFILL	51
LAWN RESTORATION	52
PAVED DRIVEWAY RESTORATION	53
STONE DRIVEWAY RESTORATION	54
TEMPORARY TOWNSHIP ROADWAY AND SHOULDER RESTORATION	55
PERMANENT TOWNSHIP ROADWAY AND SHOULDER RESTORATION	56
CONCRETE ENCASEMENT	57
CLAY DIKE	58

NOTE:
PROVIDE 6" OF AASHTO NO. 8 (OR PennDOT NO. 1B) STONE BELOW PIPE AND 12" ABOVE ENTIRE LENGTH OF PIPE.

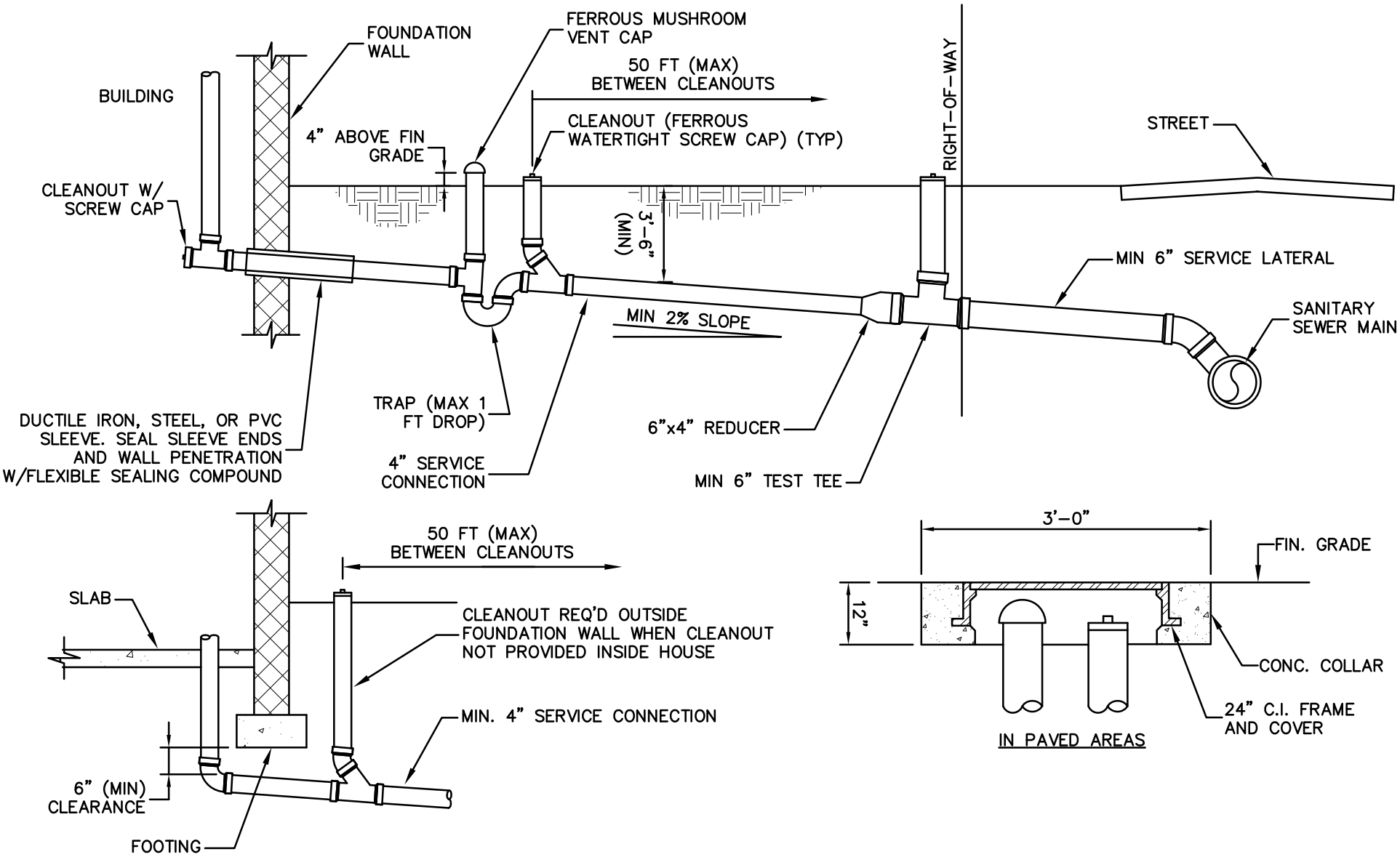

TYPICAL GRAVITY BUILDING SEWER CONNECTION

NO SCALE

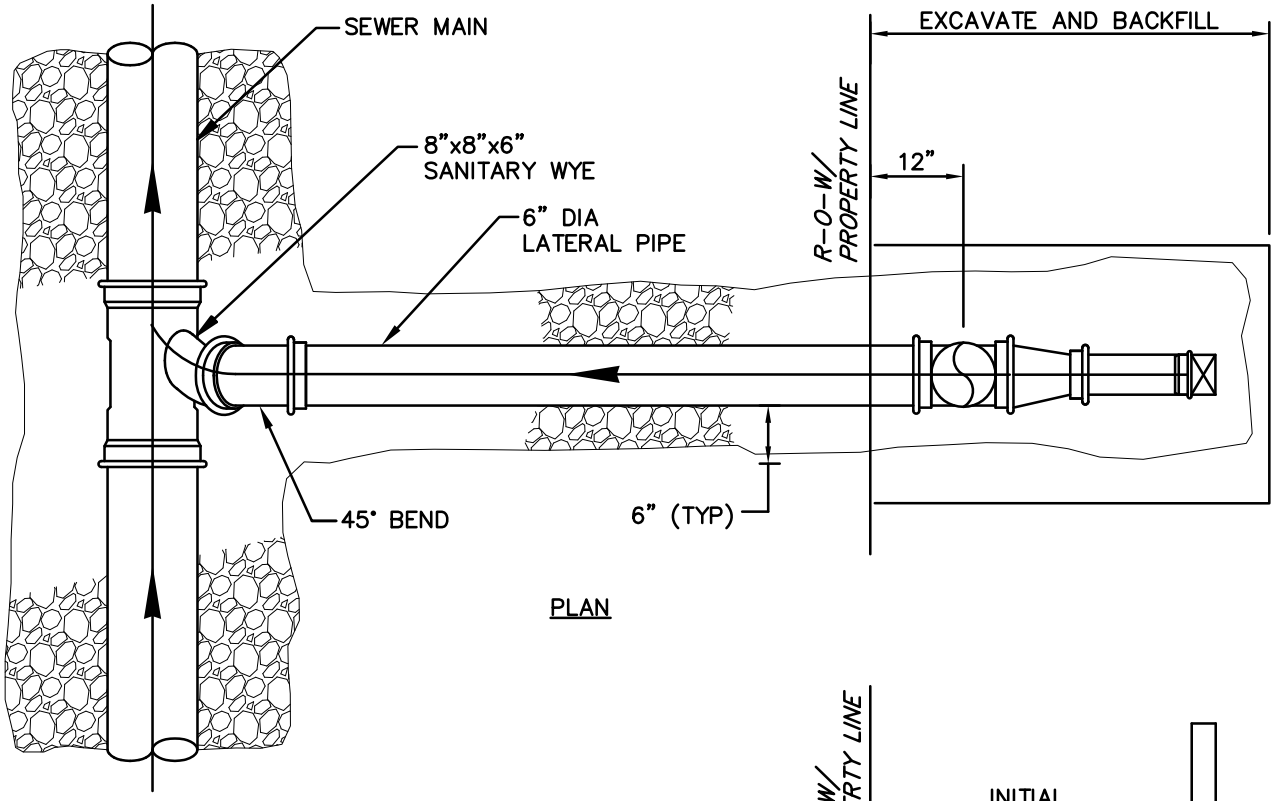

PLAN

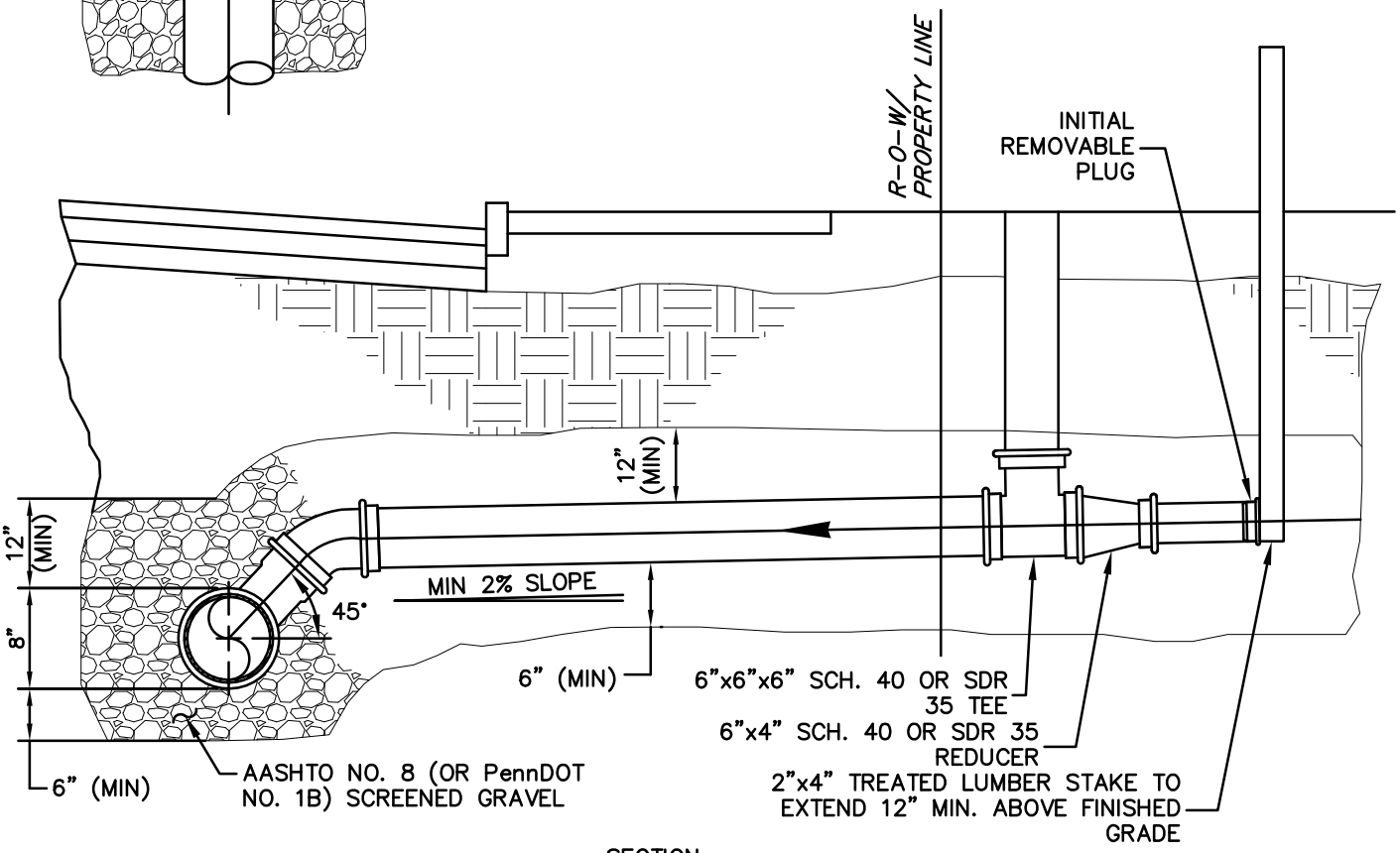

SECTION

SHALLOW SANITARY LATERAL

NO SCALE

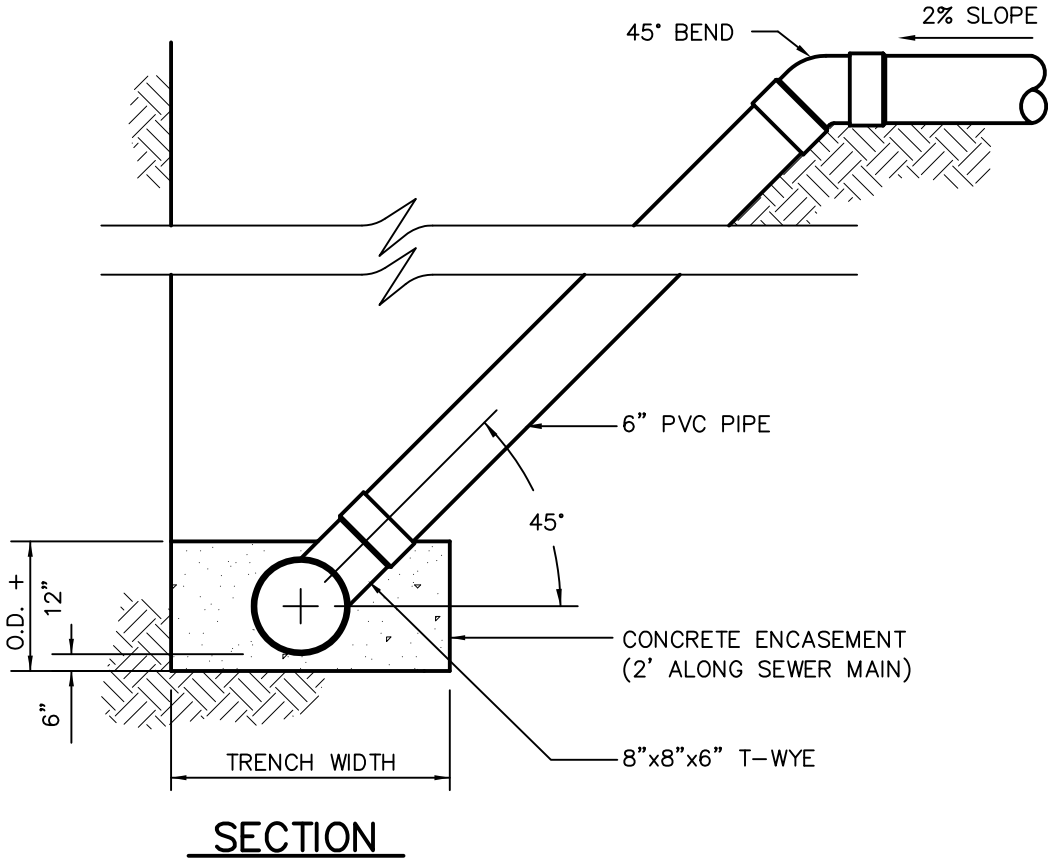

DEEP SANITARY SEWER LATERAL (12' AND DEEPER)

NOT TO SCALE

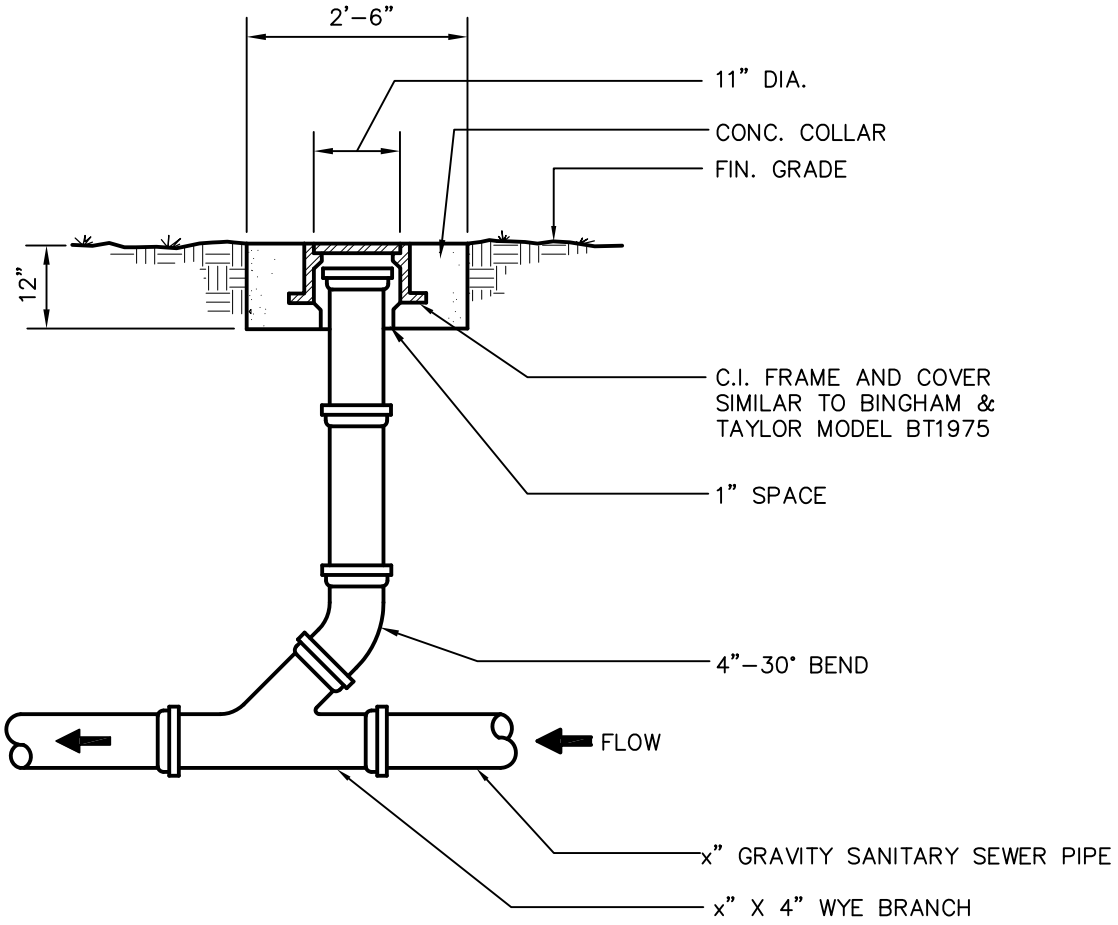

CLEANOUT

NOT TO SCALE

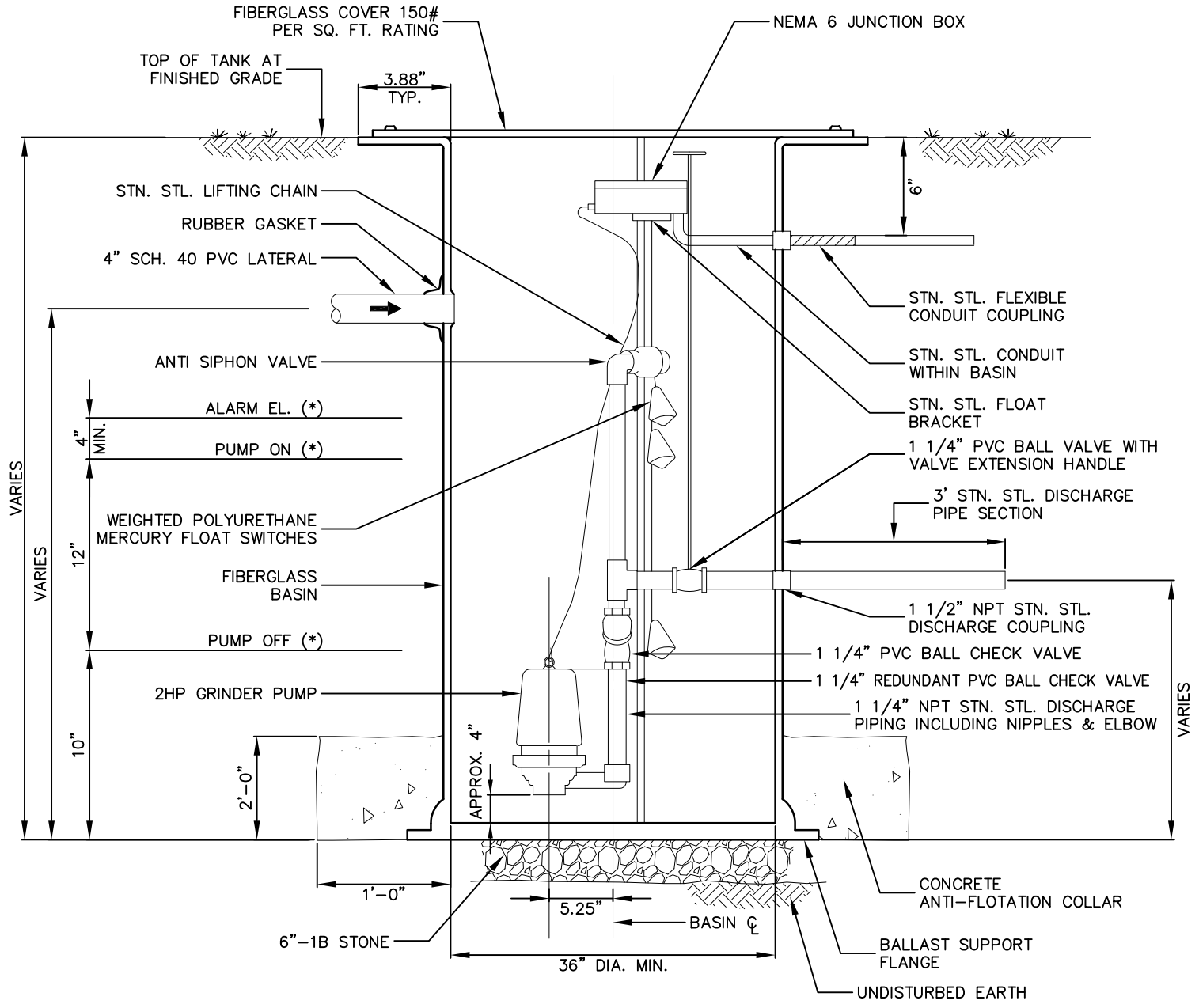

SECTION

NOTE:
* ELEVATIONS PER SITE CONDITIONS.

SIMPLEX GRINDER PUMP STATION
FIBERGLASS BASIN - SECTION

NO SCALE

NOTES:

1. CONTRACTOR SHALL PROVIDE A MINIMUM 3' SECTION OF 1 1/2" STAINLESS STEEL DISCHARGE PIPING OUTSIDE OF BASIN. THE 1 1/2" STAINLESS STEEL PIPE SHALL BE CONNECTED TO THE 1 1/2" PVC SERVICE LATERAL BY USE OF A COMPRESSION FITTING OR DRESSER COUPLING.

2. BACKFILL WITH EXCAVATED MATERIAL APPROVED BY THE ENGINEER & CONTAINING NO SOIL LUMPS, STONE, CONCRETE OR FOREIGN OBJECTS LARGER THAN ONE (1) INCH IN MAXIMUM DIMENSION OR WITH CLASS 1S MATERIAL CONSISTING OF NO. 8 COARSE AGGREGATE TO 6" BELOW GRADE; THEN TOPSOIL & SEED TOP 6".

3. MINIMUM NET EFFECTIVE STORAGE VOLUME BETWEEN PUMP SHUT-OFF ELEVATION & INVERT OF INFLUENT LINE SHALL BE 50 GALLONS.

4. ALL COVER & ACCESS HARDWARE SHALL BE STAINLESS STEEL INCLUDING ALL NUTS, BOLTS, WASHERS, ETC. WHICH PENETRATE THE COVER OR THE BASIN.

5. ALL CONTROL PANEL EXTERIOR HARDWARE SHALL BE STAINLESS STEEL.

6. FIBERGLASS BASINS MAY NOT BE USED IN AREAS SUBJECT TO TRAFFIC LOADING.

7. LOCATION OF BASIN TO BE DETERMINED BY PROPERTY OWNER.

8. FINISHED GRADE SHALL BE SLOPED AWAY FROM THE BASIN TOP.

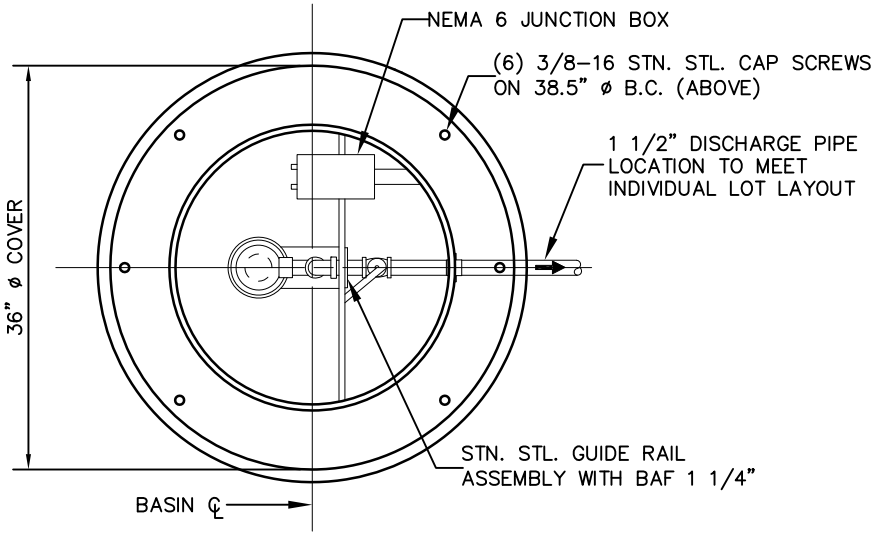

PLAN

SIMPLEX GRINDER PUMP STATION FIBERGLASS BASIN - PLAN

NO SCALE

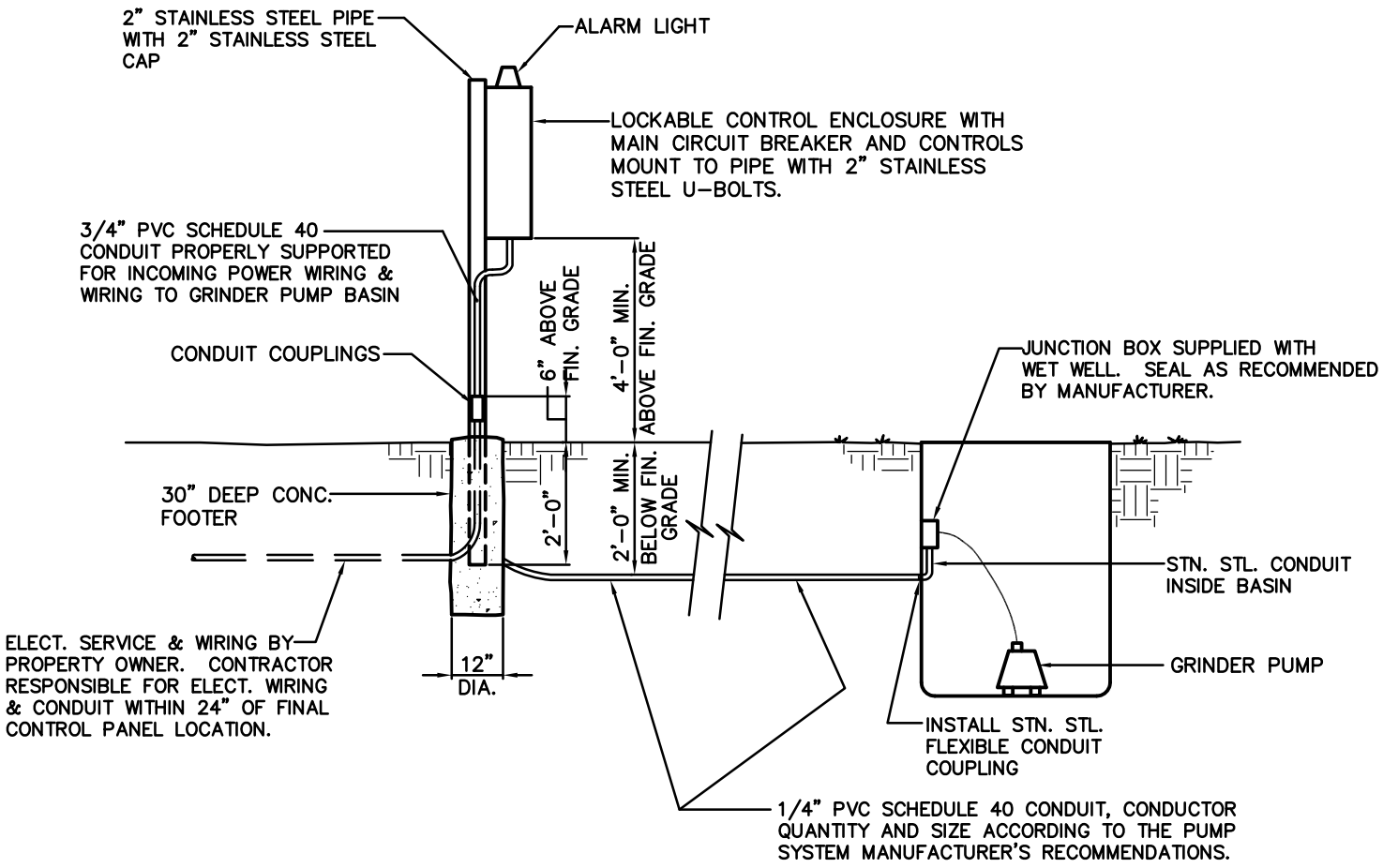

GRINDER PUMP ELECTRICAL

NOT TO SCALE

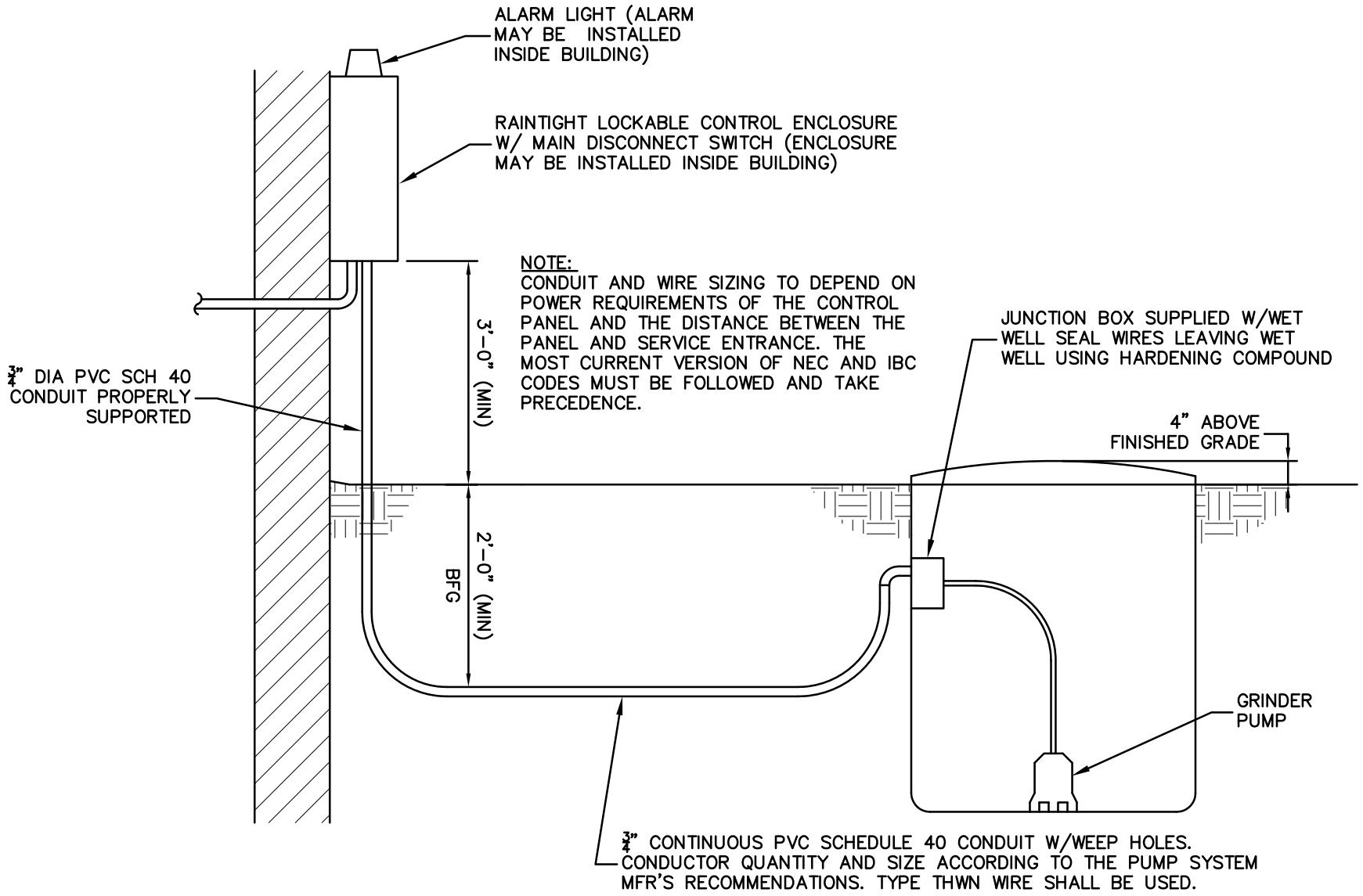

GRINDER PUMP WALL MOUNTED CONTROL PANEL

NO SCALE

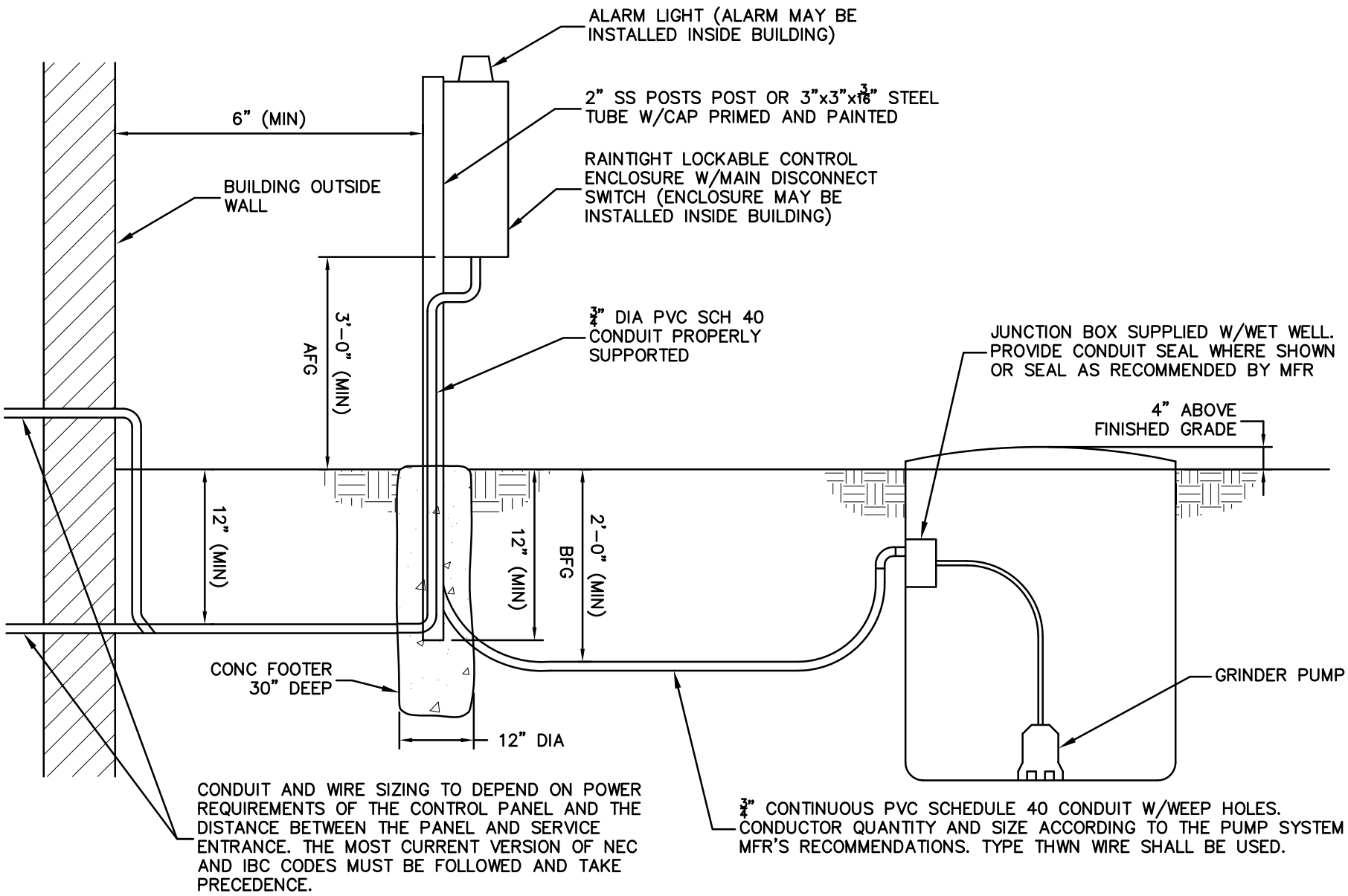

GRINDER PUMP POST MOUNTED CONTROL PANEL

NO SCALE

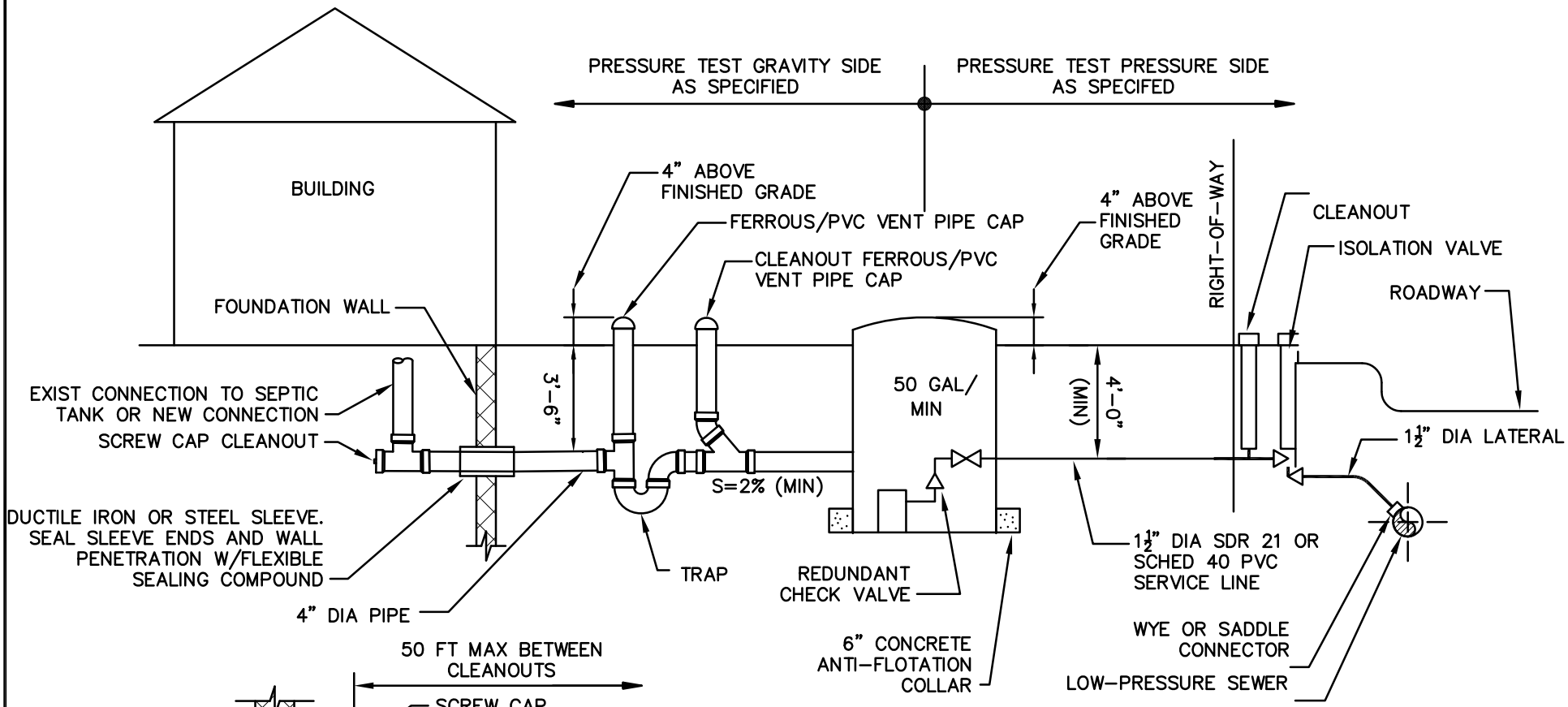

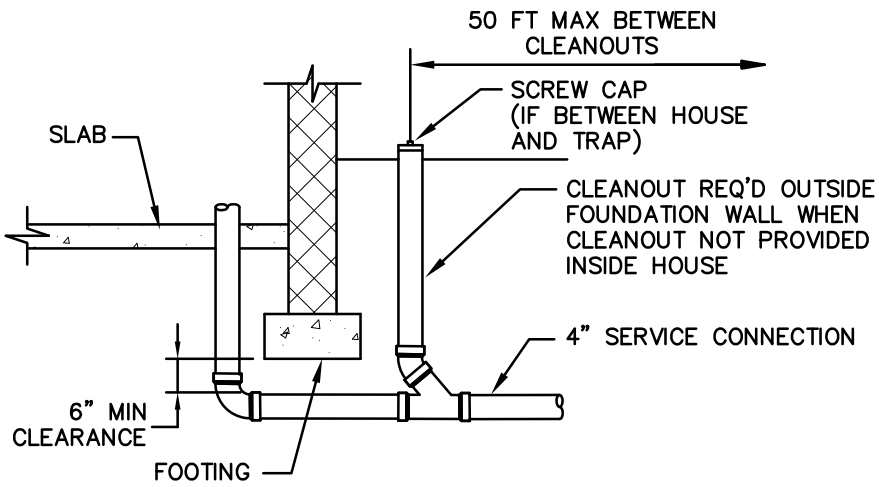

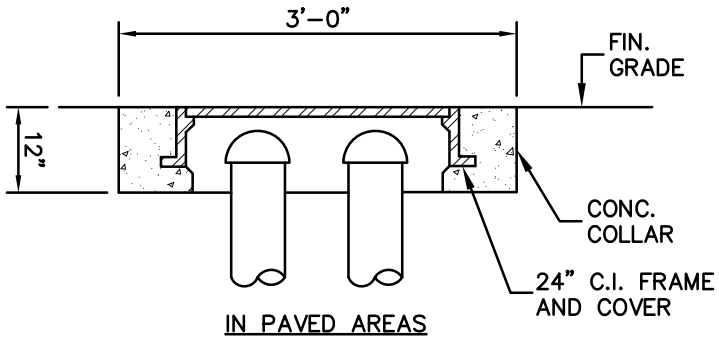

NOTES:

1. PROVIDE 6" OF AASHTO NO. 8 (OR PennDOT NO. 1B) STONE BELOW PIPE AND 12" ABOVE ENTIRE LENGTH OF PIPE.

2. TANK TO BE BEDDED ON 6" OF AASHTO NO. 57 (OR PennDOT NO. 2B) STONE.

TYPICAL GRINDER PUMP SERVICE LINE TO LOW PRESSURE SEWER SCHEMATIC

NO SCALE

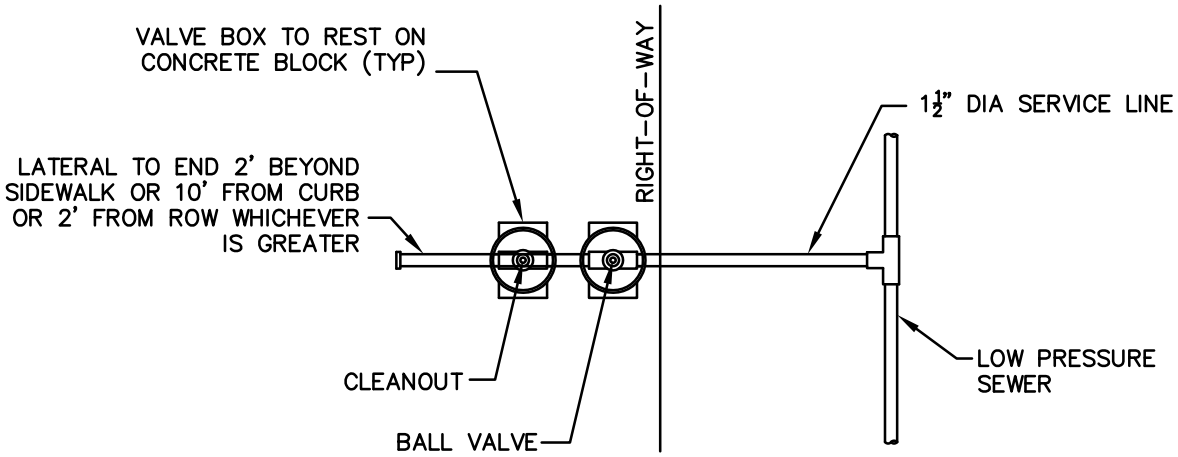

PLAN

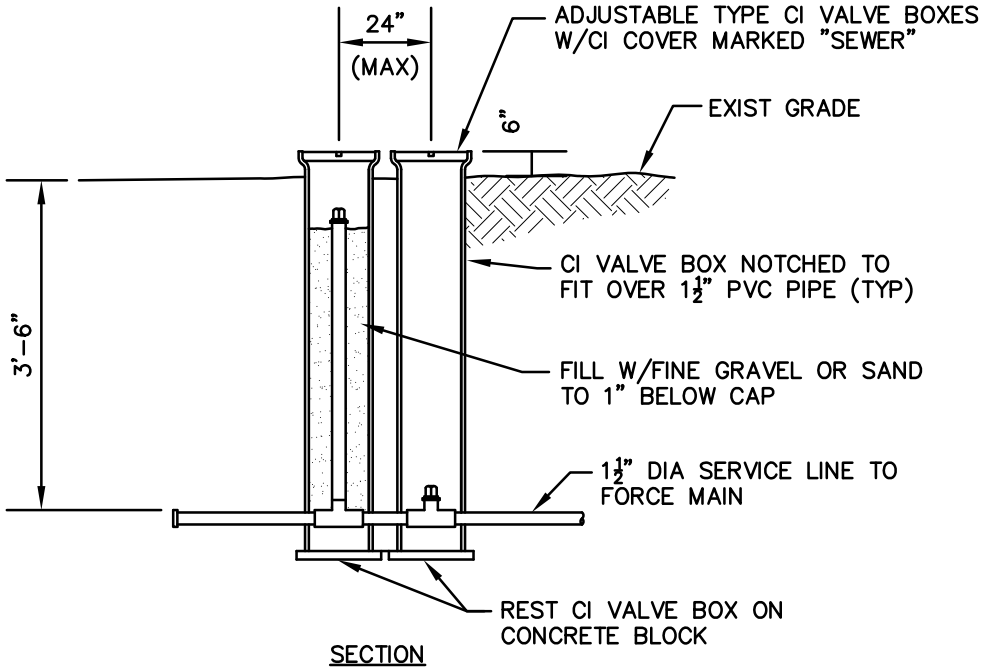

SECTION

NOTES:
1. ALL PVC CONNECTIONS SHALL BE SOLVENT WELDED UNLESS NOTED OTHERWISE.

2. PROVIDE 6" OF AASHTO NO. 8 (OR PennDOT NO. 1B) STONE BELOW PIPE AND 12" ABOVE ENTIRE LENGTH OF PIPE.

TYPICAL LATERAL CONNECTION TO LOW PRESSURE FORCEMAIN

NO SCALE

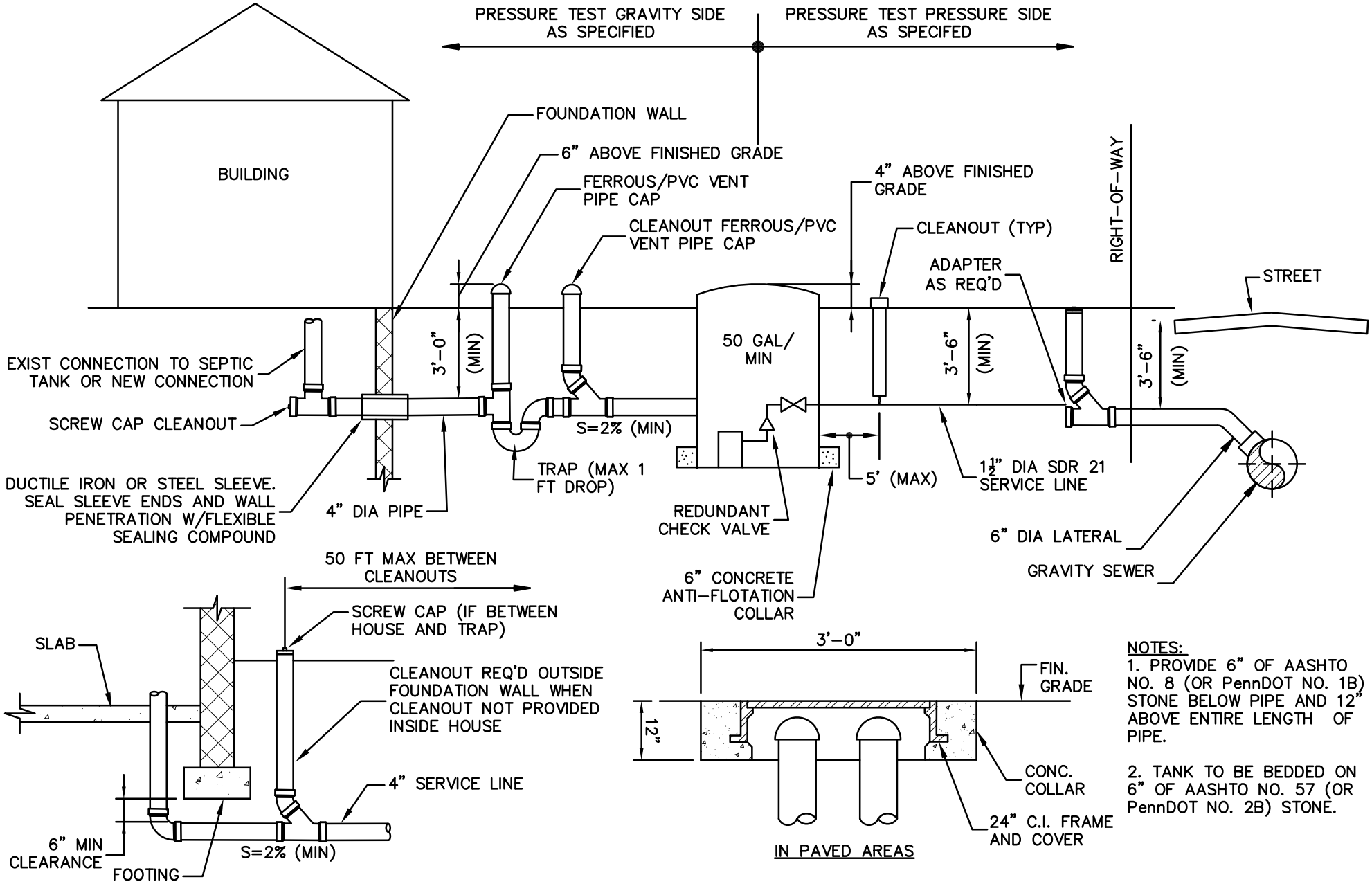

NOTES:

1. PROVIDE 6" OF AASHTO NO. 8 (OR PennDOT NO. 1B) STONE BELOW PIPE AND 12" ABOVE ENTIRE LENGTH OF PIPE.

2. TANK TO BE BEDDED ON 6" OF AASHTO NO. 57 (OR PennDOT NO. 2B) STONE.

TYPICAL GRINDER PUMP SERVICE LINE TO GRAVITY SEWER SCHEMATIC

NO SCALE

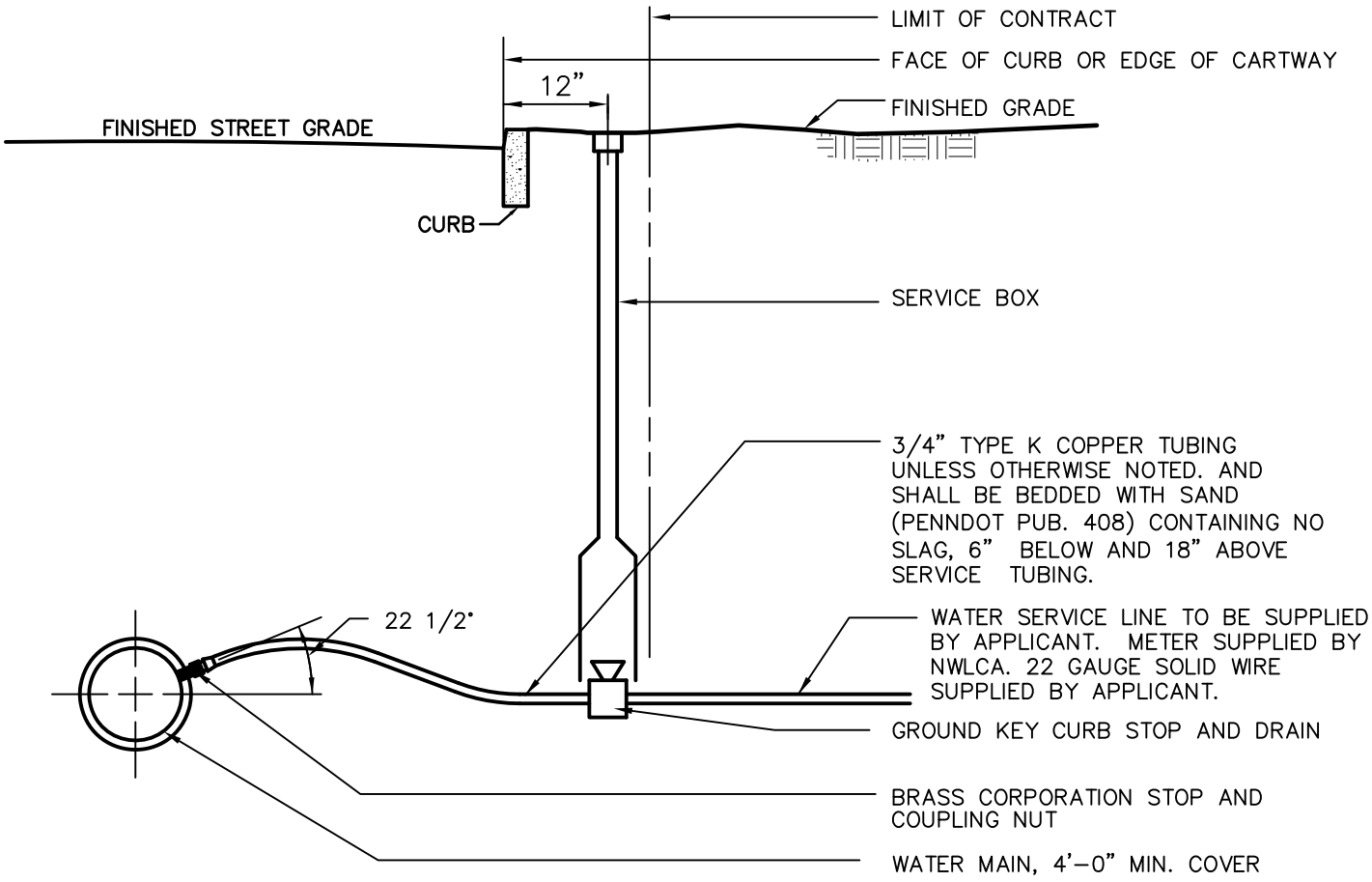

NOTES:

1. THE AUTHORITY REQUIRES THAT A WATER METERING CHAMBER BE INSTALLED FOR ALL WATER SERVICE LINES GREATER THAN 100 FEET MEASURED FROM PUBLIC RIGHT-OF-WAY TO FACE OF BUILDING ALONG THE WATER SERVICE LINE. THIS APPLIES TO BOTH RESIDENTIAL AND COMMERCIAL INSTALLATIONS. THE WATER METERING CHAMBER SHALL BE INSTALLED AT THE RIGHT-OF-WAY LINE OR ALTERNATE LOCATION APPROVED BY THE AUTHORITY.

2. WATER METERING CHAMBERS SHALL BE REVIEWED AND APPROVED BY THE AUTHORITY.

STANDARD
DOMESTIC SERVICE INSTALLATION

NOT TO SCALE

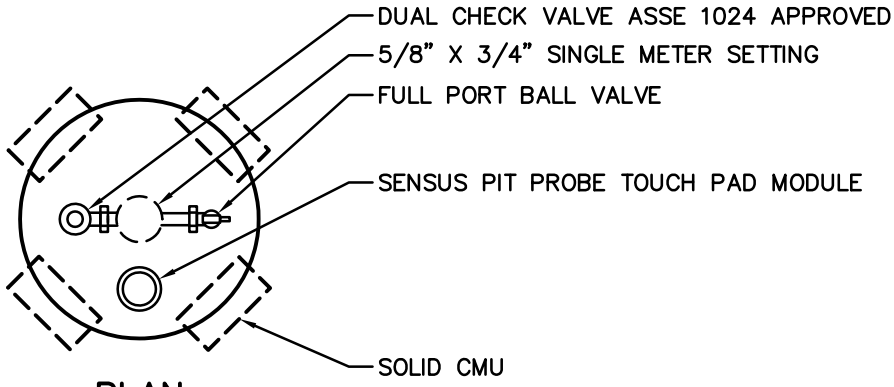

PLAN

NOTES:
1. FORD COIL PIT SETTER OR APPROVED EQUAL.
2. BRASS CONNECTIONS CONFORM TO ASTM C800.
3. BRASS VALVES & FITTINGS NSF/ANSI 61 APPROVED.

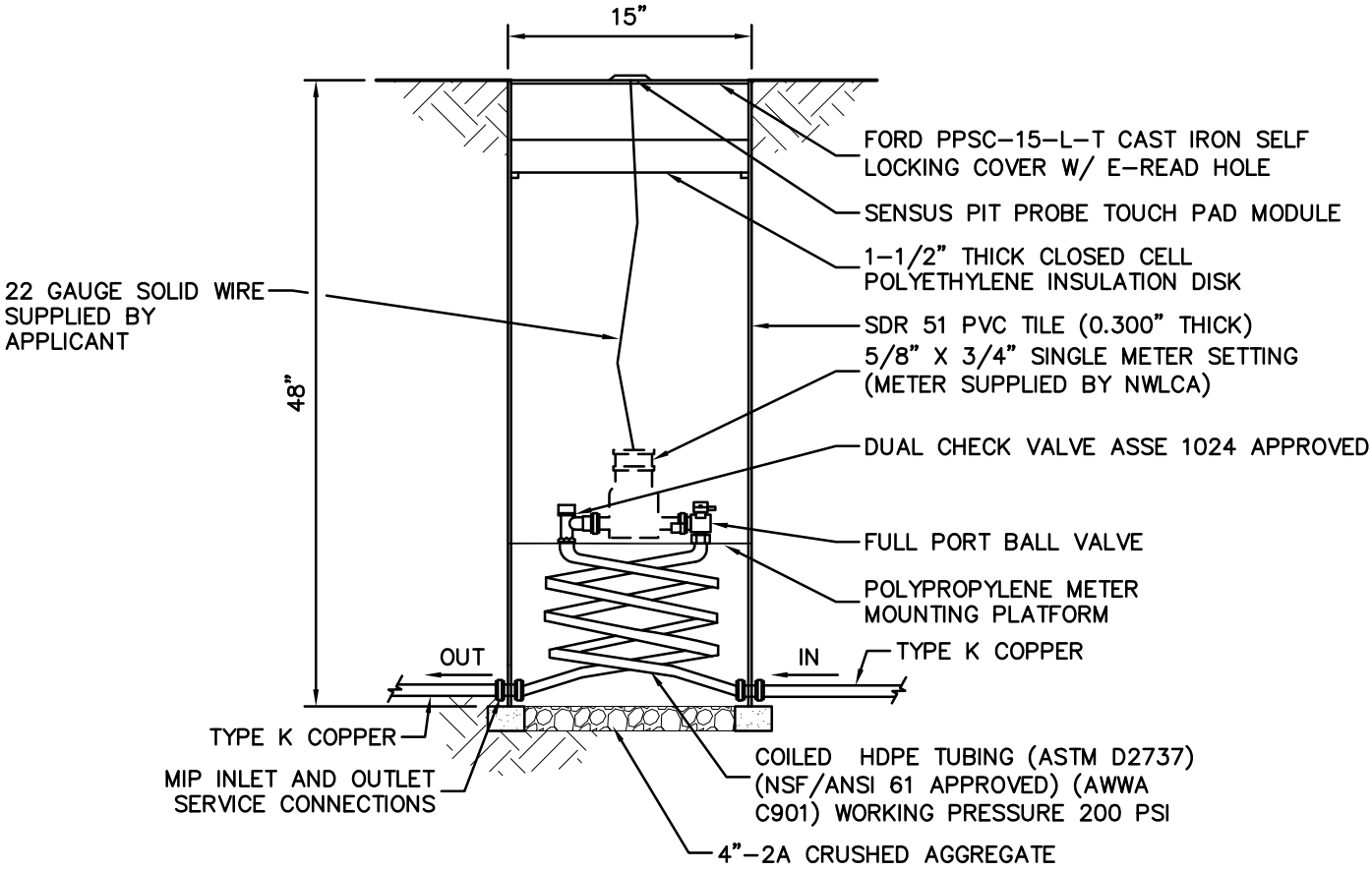

SECTION

NOTES:

1. THE AUTHORITY REQUIRES THAT A WATER METERING CHAMBER BE INSTALLED FOR ALL WATER SERVICE LINES GREATER THAN 100 FEET MEASURED FROM PUBLIC RIGHT-OF-WAY TO FACE OF BUILDING ALONG THE WATER SERVICE LINE. THIS APPLIES TO BOTH RESIDENTIAL AND COMMERCIAL INSTALLATIONS. THE WATER METERING CHAMBER SHALL BE INSTALLED AT THE RIGHT-OF-WAY LINE OR ALTERNATED LOCATION APPROVED BY THE AUTHORITY.

2. WATER METERING CHAMBERS SHALL BE REVIEWED AND APPROVED BY THE AUTHORITY.

3. OTHER SIZES SHALL BE REVIEWED ON A CASE BY CASE BASIS.

STANDARD 3/4" METERING CHAMBER

NO SCALE

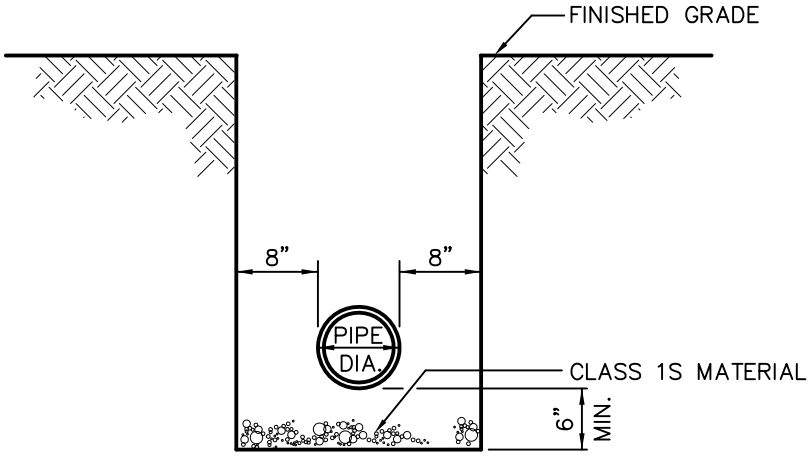

TYPICAL TRENCH

NOT TO SCALE

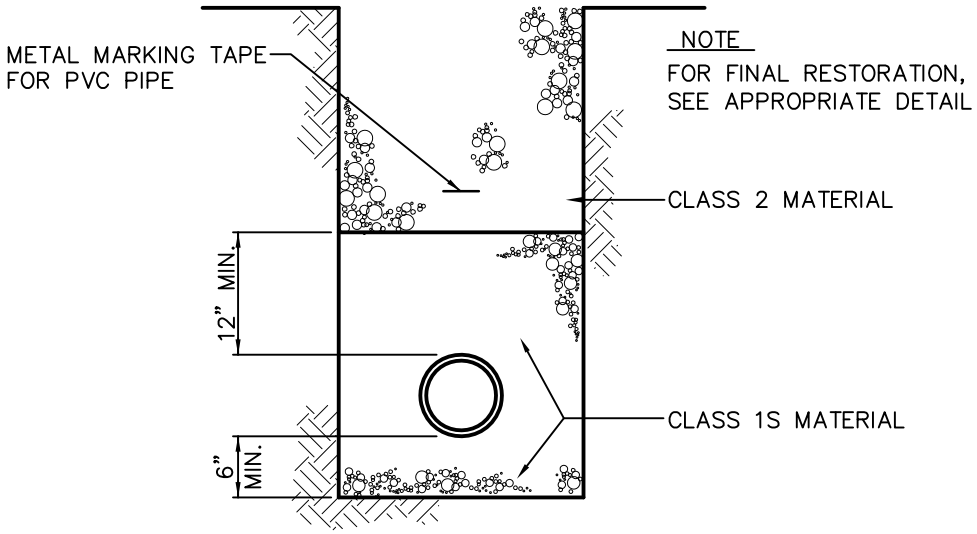

TYPICAL BACKFILL
(OTHER THAN PAVED AREAS)

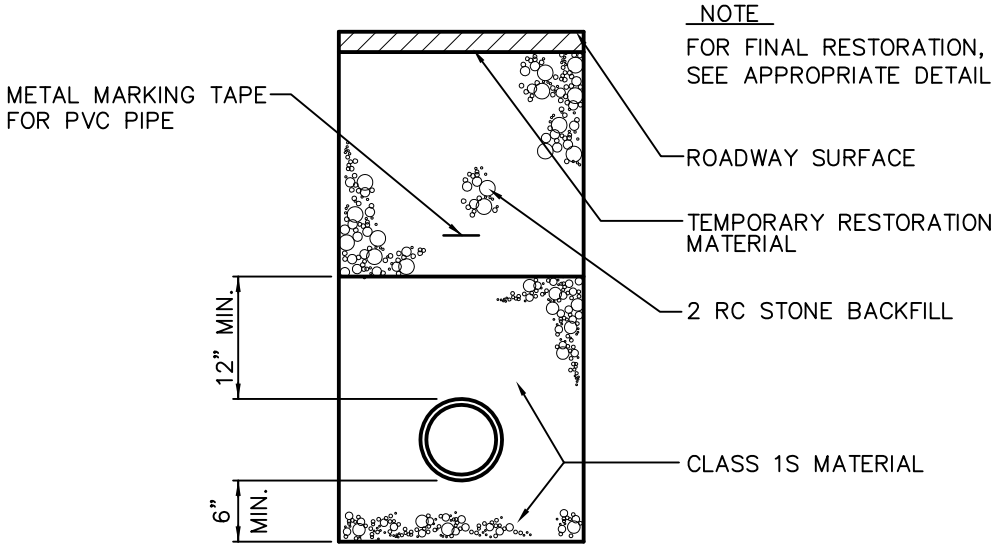

TYPICAL BACKFILL
(ALL PAVED AREAS)

TYPICAL TRENCH BACKFILL

NOT TO SCALE

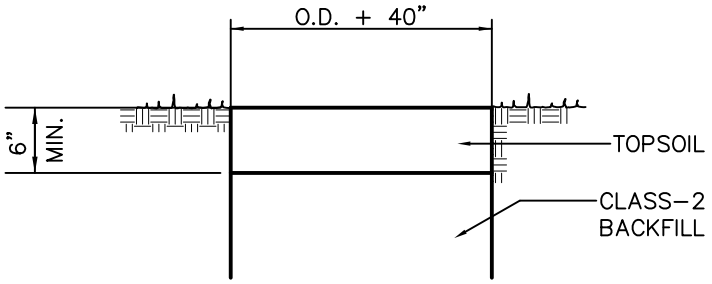

LAWN RESTORATION DETAIL

NOT TO SCALE

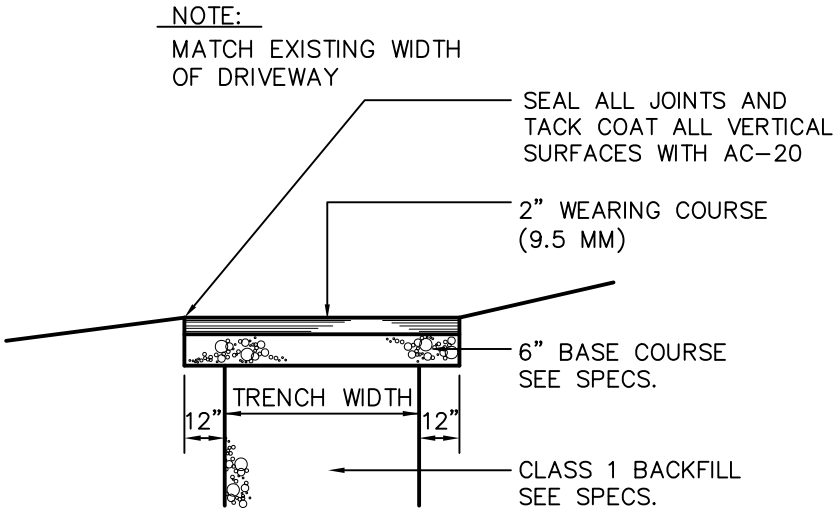

PAVED DRIVEWAY RESTORATION

NOT TO SCALE

NOTE:

MATCH EXISTING WIDTH
OF DRIVEWAY

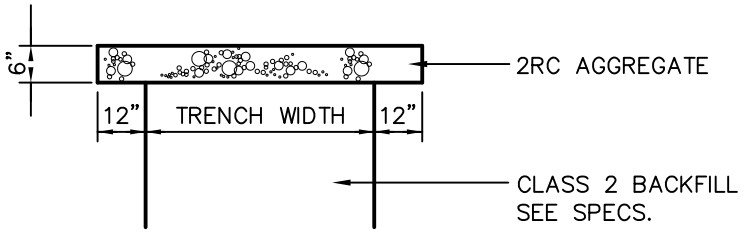

STONE DRIVEWAY RESTORATION

NOT TO SCALE

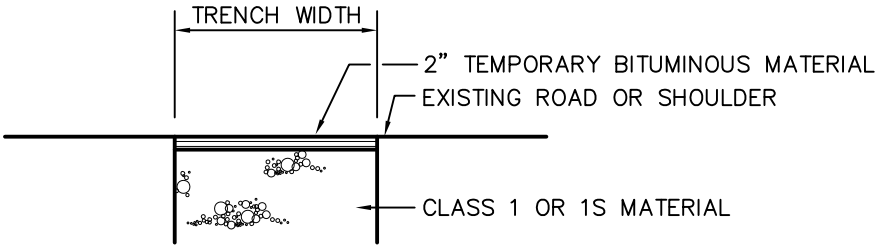

TEMPORARY TOWNSHIP ROADWAY AND SHOULDER RESTORATION

NOT TO SCALE

NOTES

- ALL VERTICAL CUTS SHALL BE SAWCUT ONLY
- MATERIAL AND PLACEMENT FOR COARSE AND FINE AGGREGATES SHALL BE IN ACCORDANCE WITH PENNDOT SPECIFICATIONS PUBLICATIONS 408, LATEST EDITION.

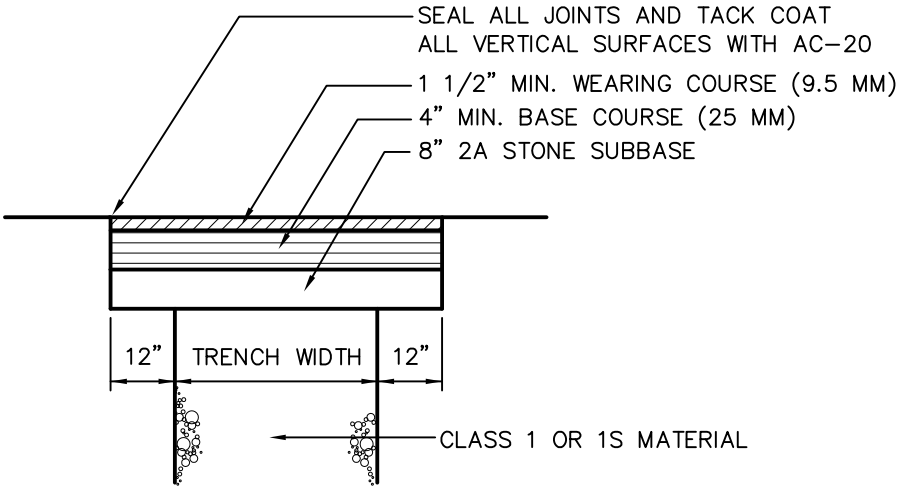

PERMANENT TOWNSHIP ROADWAY AND SHOULDER RESTORATION

NOT TO SCALE

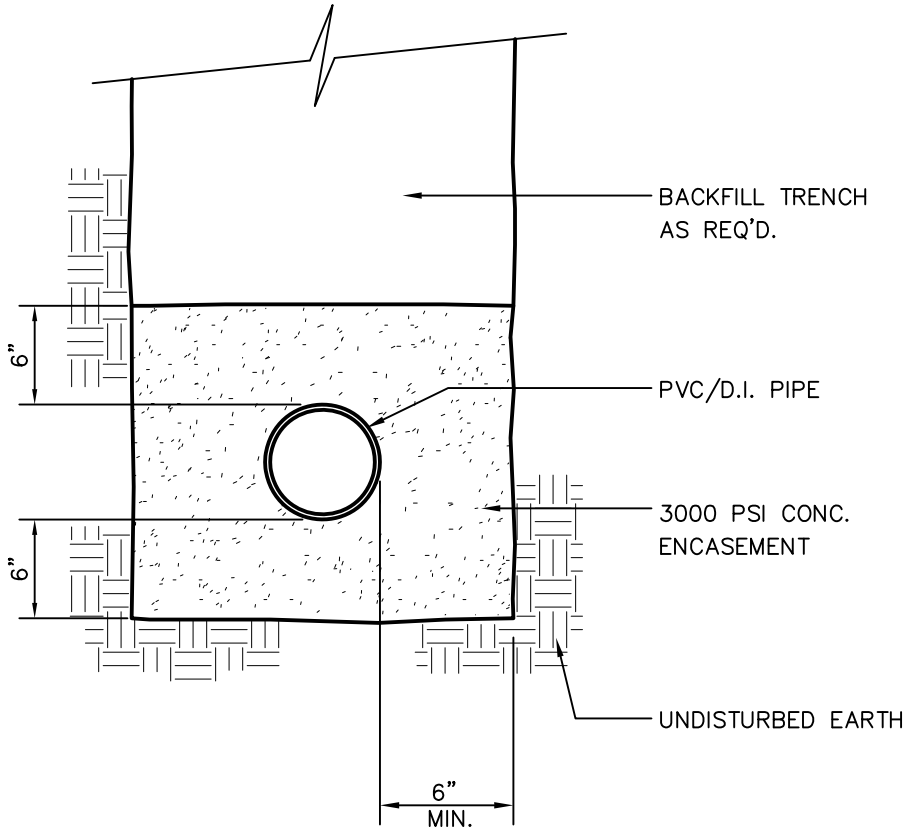

CONCRETE ENCASEMENT

NOT TO SCALE

NOTES:

1. CLAY DIKES SHALL BE INSTALLED AROUND SANITARY SEWER LINE EVERY 200 FEET, OR AD DETERMINED BY THE AUTHORITY.

2. CLAY DIKE SHALL CONSIST OF CLAY CONTAINING NO MORE THAN 15% (BY VOLUME) STONE NO LARGER THAN TWO (2) INCHES IN DIAMETER. CLAY SHALL BE PLACED IN SIX (6) INCH LIFTS AND COMPACTED BY A MECHANICAL TAMPER TO NOT LESS THAN 95% OF MAXIMUM DENSITY AT OPTIMUM MOISTURE CONTENT.

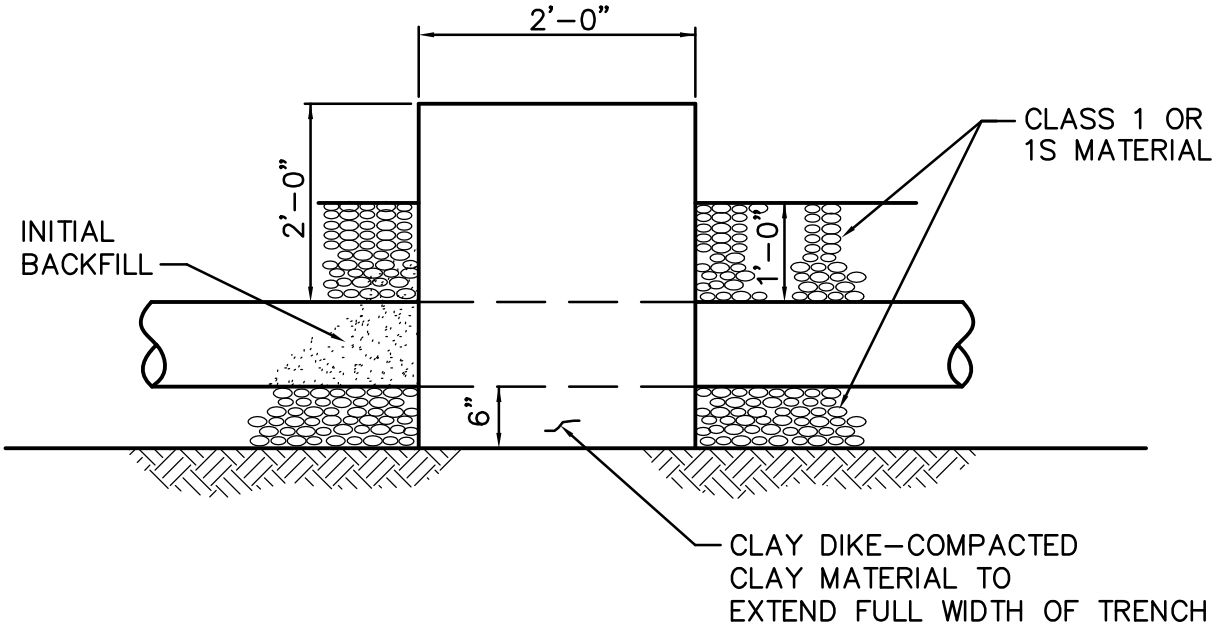

CLAY DIKE DETAIL

NOT TO SCALE

APPENDIX B

SPECIFIC CONDITIONS CONSTRUCTION DETAILS

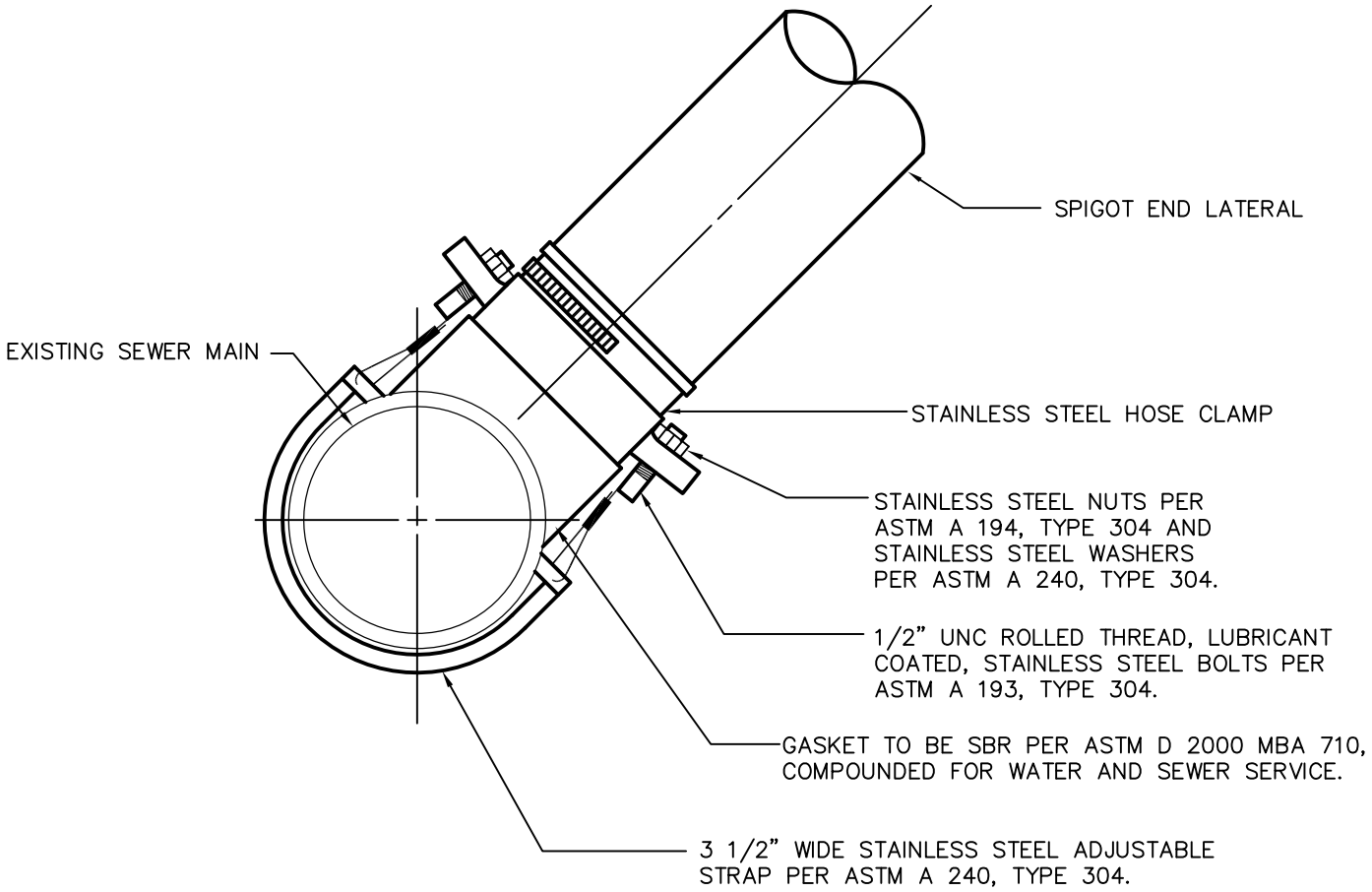

NOTES:

1. FOR USE ONLY WITH AUTHORITY'S SPECIFIC APPROVAL.
2. SADDLE SHALL BE ENCASED IN CONCRETE.
3. PIPE SADDLES SHALL BE STYLE "CB" SEWER SADDLE AS MANUFACTURED BY ROMAC INDUSTRIES, INC. OR APPROVED EQUAL.
4. INSTALLATION SHALL BE IN ACCORDANCE WITH MANUFACTURER'S INSTRUCTIONS.
5. THE CONTRACTOR SHALL MAKE THE TAP INTO THE EXISTING PIPE USING SUITABLE HOLE CUTTING EQUIPMENT AND WITHOUT DAMAGING THE EXISTING PIPE.

SADDLE CONNECTION

NOT TO SCALE

GENERAL NOTES:

1. FOR USE ONLY WITH AUTHORITY'S SPECIFIC APPROVAL.
2. CONTRACTOR SHALL FURNISH AND INSTALL A XX" PALMER BOWLUS FLUME. THE MANHOLE SHALL BE 5' DIAMETER (MINIMUM). THE FLUME SHALL BE SET LEVEL AND CONTRACTOR SHALL PROVIDE PIPE STUB ENDS WITH FLEXIBLE NEOPRENE COUPLING AND S.S. BAND CLAMPS.
3. CONTRACTOR SHALL SUPPLY AND INSTALL AN EASTECH FLOW CONTROLS–VANTAGE MODEL 2210 DUAL CHANNEL ULTRASONIC LEVEL FLOW METER.
4. CONTRACTOR SHALL SUPPLY AND INSTALL TELOG MULTI–CHANNEL DATA RECORDER–MODEL 3307 WITH CELLULAR MODEM OPTION.
5. THE EASTECH AND TELOG DEVICES SHALL BE INSTALLED INSIDE A HOFFMAN TYPE 4 WALL MOUNT (CONTINUOUS HINGE WITH CLAMPS), NEMA 4, STAINLESS STEEL ENCLOSURE. SEE RECORDER MOUNTING DETAIL.

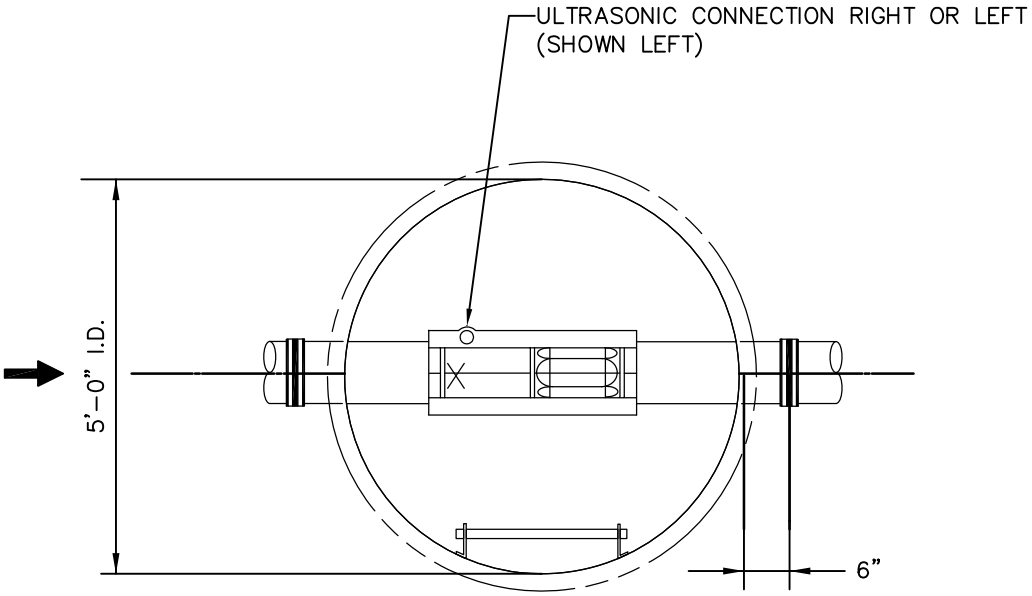

METERING MANHOLE

NO SCALE

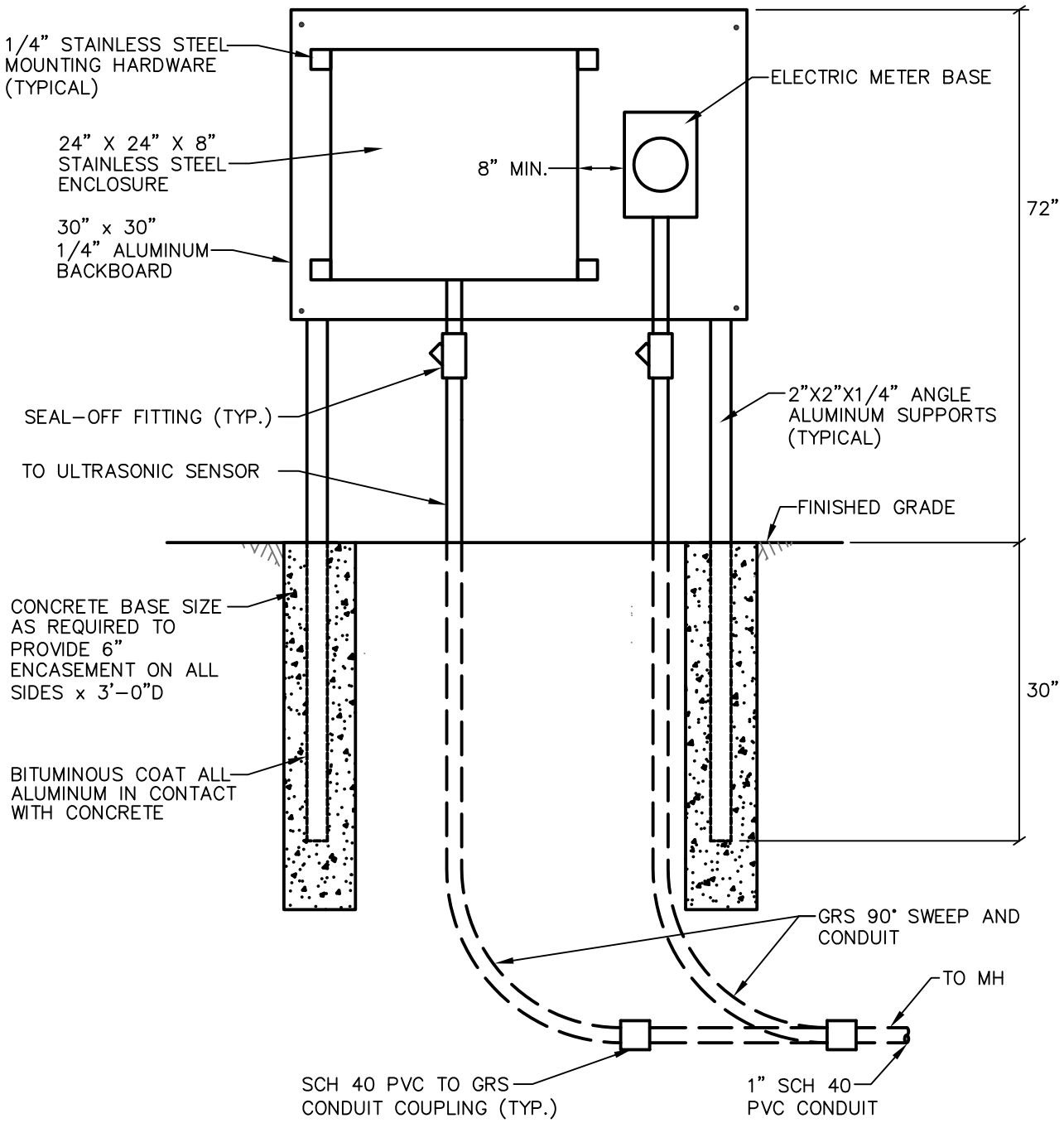

NOTE:

1. FOR USE ONLY WITH AUTHORITY'S SPECIFIC APPROVAL.
2. ALL MATERIALS AND CONSTRUCTION SHALL BE COMPLETED IN ACCORDANCE WITH APPLICABLE BUILDING AND ELECTRICAL CODES

RECORDER MOUNTING DETAIL

NOT TO SCALE

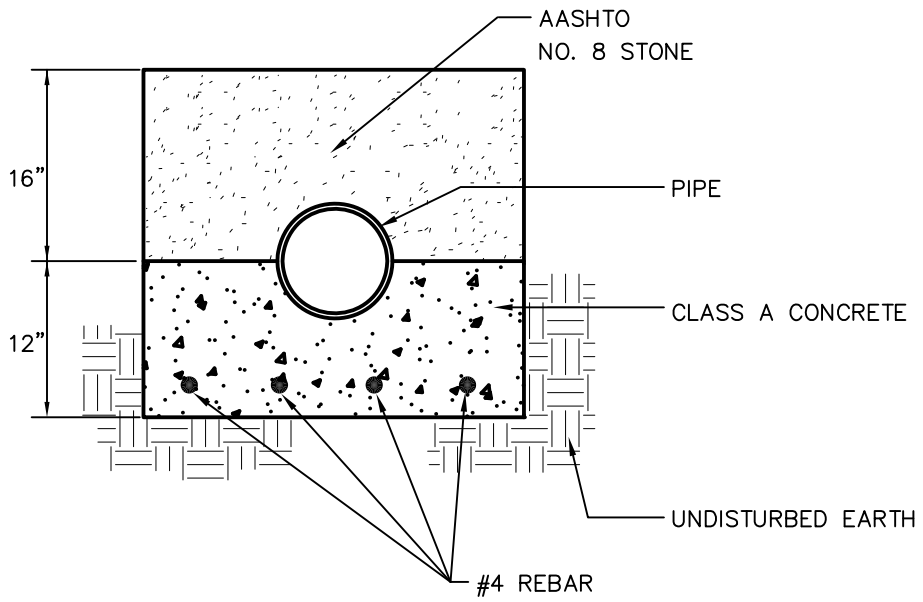

NOTES:

1. FOR USE ONLY WITH AUTHORITY’S SPECIFIC APPROVAL.
2. THE LENGTH OF CONCRETE SHALL EXTEND 10–FEET ON BOTH SIDES OF THE DEPRESSION.
3. THE WIDTH OF THE CONCRETE SHALL BE A MINIMUM OF 30–INCHES.
4. FIELD ADJUSTMENTS MAY BE NECESSARY.

CONCRETE CRADLE

NOT TO SCALE